KOBELT MANUFACTURING COMPANY LIMITED

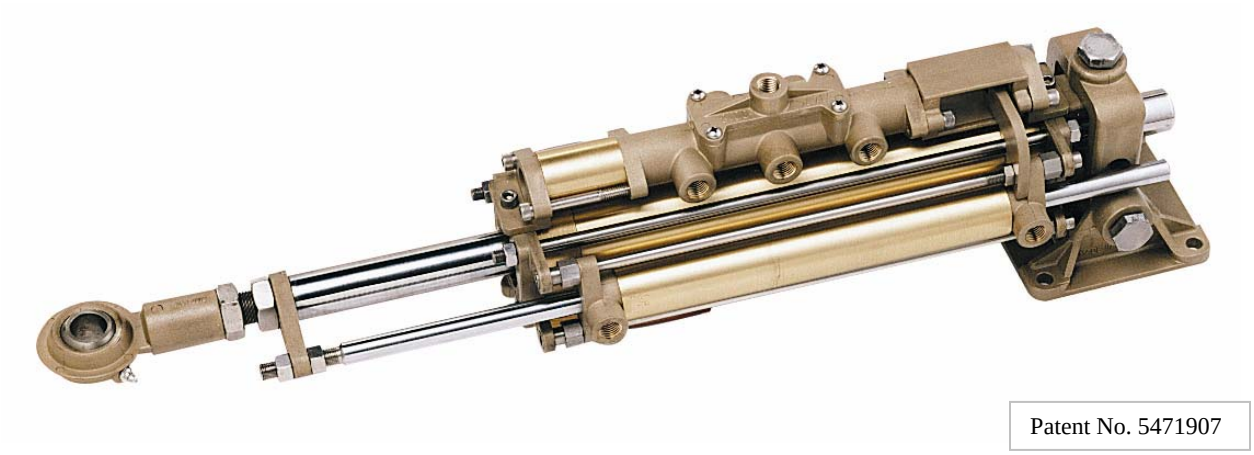

Patent No. 5471907

MODEL 7147 FULL POWER FOLLOW-UP STEERING CYLINDER

The 7147 Full Power Follow-up steering system is primarily designed for boats up to 120 ft in length, depending on power and speed. The unit is designed to provide the helmsman to operate the rudder effortlessly and with complete control.

Its function is to turn manual steering into power steering which will provide the operator with fingertip control over the rudder. A source of hydraulic pressure is required to make this unit functional. It is capable of handling hydraulic fluid up to 8 gallons per minutes at 1000 psi. Should however, the hydraulic power fail, the valve arrangement will switch this unit automatically to manual steering mode.

Capable of handling a maximum rudder torque of 5,000 ft-lbs or 695 kg-m, the unit is available in 7½", 10" and 12" strokes. The unit is constructed entirely in bronze and stainless steel which can endure well in the harsh marine environment for years of trouble-free service.

This unit is an extremely compact device and provides the ultimate in simplicity as far as installation and maintenance is concerned. Since a full power follow up valve and servo cylinder is all incorporated on to the main cylinder, no additional linkage is required to make this unit work. This model can also be used in dual cylinder installations by simply adding one cylinder and two hoses to the system giving it an easy task to upgrade the existing manual hydraulic system to power steering.

	Main Cylinder Displacement	
Stroke	**inch³**	**cm³**
10"	23.6	386
12"	28.3	463
	Servo Cylinder Displacement	
10"	5.9	97
12"	7.1	116

ORDERING INFORMATION

7147-H10C = 10" stroke
7147-H12C = 12" stroke

Approx. weight: 33 lb. (15 kg) for 10" stroke
35 lb. (16 kg) for 12" stroke

SPECIFICATION
Maximum Operating Pressure: 1000 p.s.i. (69 bar)
Main Cylinder bore: 2 in. (50.8 mm) bronze
Main Piston rod diameter: 1 in. (25.4 mm) stainless steel

Please visit our website http://*www.kobelt.com* for more information.

MODEL 7147

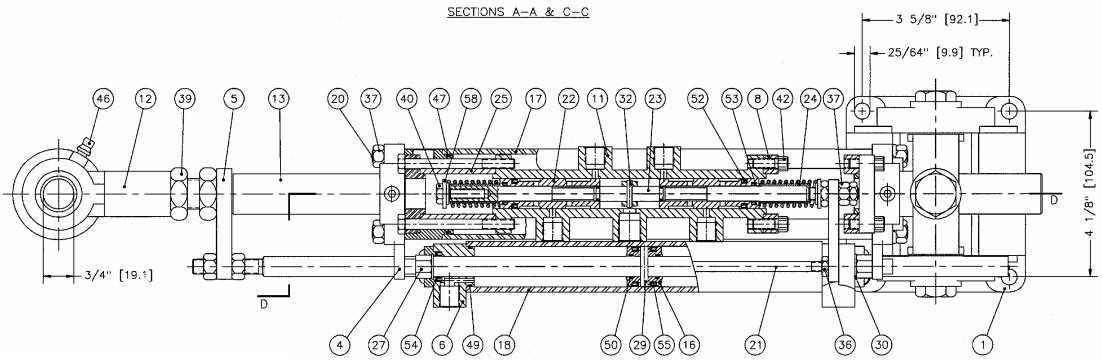

Stroke		B		E	
in.	mm	in.	mm	in.	mm
7.5	191	24.25	616	21.6	549
10	254	29.25	743	25.4	645
12	305	33.25	845	28.4	721

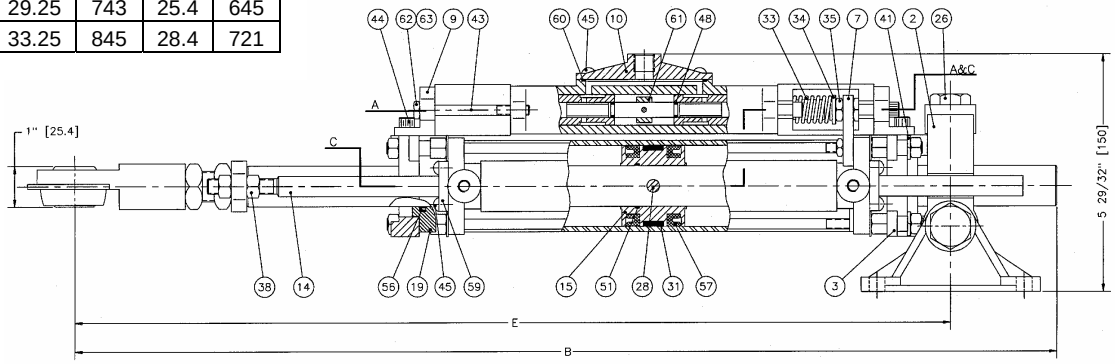

ITEM	QTY	PART NUMBER	DESCRIPTION	ITEM	QTY	PART NUMBER	DESCRIPTION
1	1	7147-0001	Foot	33	2	1201-0207	Spring
2	1	7147-0002	Swivel	34	1	7147-0034	Washer
3	1	7147-0003	End Cap - swivel end	35	2	1022-0261	Jam Nut
4	1	7147-0004	End Cap - swivel end	36	1	1022-0260	Jam Nut
5	1	7147-0005	Link Arm	37	9	1022-0161	Hex Nut
6	2	7147-0006	Servo End Cap	38	2	1022-0162	Hex Nut
7	1	7147-0007	Servo Link	39	2	1022-0267	Hex Jam Nut
8	1	7147-0008	Spring Cover	40	1	1001-1008	Hex Hd Cap Screw
9	2	7147-0009	Servo Mounting	41	4	1023-0311	Lock Washer
10	1	7147-0010	Spool Housing Cover	42	4	1002-1010	Hex Socket Hd Cap Screw
11	1	7147-0011	Spool Housing	43	2	7147-0030	Tie Rod
12	1	7147-0012	Rod End	43	2	1001-1044	Hex Hd Cap Screw
13	1	7147-0013	Main Piston Rod	44	2	1002-1012	Hex Socket Hd Cap Screw
14	1	7147-0014	Servo Piston Rod	45	8	1012-0808	Round Hd Philip Mach.
15	1	7147-0015	Main Piston	46	1	1501-0301	Grease Nipple
16	1	7147-0016	Servo Piston Rod	47	2	1101-0133	"O" Ring
17	1	7147-0017	Main Tube	48	2	1101-0010	"O" Ring
18	1	7147-0018	Servo Tube	49	2	1101-0020	"O" Ring
19	2	7147-0019	Main Shaft Guide	50	1	1101-0014	"O" Ring
20	4	7147-0020	Main Tie Rod	51	1	1101-0022	"O" Ring
21	2	7147-0021	Servo Tie Rod	52	4	1102-8005	"U" Cup
22	2	7147-0022	Outer Spool	53	2	1102-0062	"U" Cup
23	1	7147-0023	Inner Spool	54	2	1102-3005	"U" Cup
24	2	7147-0024	Bushing	55	2	1102-2007	"U" Cup
25	1	7147-0025	Spacer	56	2	1102-2009-H	"U" Cup
26	4	7147-0026	Hex Shoulder Bolt	57	2	1102-0029	"U" Cup
27	4	7147-0027	Hex Nut	58	1	7147-0058A	Washer (for 5/16" bolt)
28	1	7147-0028	Main Piston Pin	58	1	7147-0058B	Washer (for 1/4" bolt)
29	1	7005-0024	Servo Piston Pin	59	2	7147-0006B	Seal Cover
30	4	1023-0110	Flat Washer	60	1	7147-0060	Gasket
31	1	7050-0013	Wear Ring	61	1	7147-0050	Spacer
32	1	1024-0508	Spring Pin	62	2	1023-0310	Lock Washer
				63	2	1022-0110	Nut