7196 Two Speed Jog Lever

Owner's Operation, Installation & Maintenance Manual

Kobelt Manufacturing Co. Ltd.

NOTES:

RECORD DATA BEFORE INSTALLATION FOR FUTURE REFERENCE	
Model #:	
Serial #:	
Date of Purchase:	
Date of Installation:	

TABLE OF CONTENTS

1 Introduction 4
1.1 Contact 4
1.2 Safety 4
2 Product Description 6
2.1 Technical Data 6
2.2 Model Code Key 7
3 Installation 8
3.1 Mechanical 8
3.2 Electrical 8
4 Commissioning 14
4.1 Electrical Check 14
4.2 Functional Test 14
5 Operation 15
5.1 7196 Standard Model Operation 15
5.2 7196-D Duplicate Output Model Operation 16
6 Maintenance 17
6.1 Preventative Maintenance 17
6.2 Recommended Spare Parts and Kits 17
7 Troubleshooting 18
8 Revision History 19
9 Warranty 20
10 Appendix A: Installation Dimensions 21
11 Appendix B: Parts List 22
11.1 Parts List Notes: 27
12 Appendix C: Repair Kit Installation 28
13 Appendix D: Installation of Spring Retro-Fit Kit 29
14 Appendix E: Microswitch Retrofit/Repair Kit Installation 30
14.1 Determination of Microswitch Style 30
14.2 Installation of Microswitch Retrofit/Repair Kit 31
15 Appendix E: Installation Cut-out Template 46

1 INTRODUCTION

1.1 CONTACT

Kobelt Manufacturing Co. Ltd.
8238 129th Street
Surrey, British Columbia
Canada, V3W 0A6

Sales Tel: +1-604-572-3935
Fax: +1-604-590-8313
Email: sales@kobelt.com
Website: www.kobelt.com

This document is intended to clearly present comprehensive product data and provide technical information to assist the end user in design applications. Kobelt reserves the right, without notice, to change the design, or construction, of any products and to discontinue or limit distribution of any products. Kobelt also reserves the right to change, or update, without notice, any technical information contained within this document.

Kobelt recommends that customers visit our website to check for updates to this Manual. Once a product has been selected for use, it should be tested by the user to ensure proper function in all possible applications. For further instructions, please contact our distributors or visit our website.

1.2 SAFETY

1.2.1 Safety Alerts

Throughout this manual, the following symbols, and their accompanying explanation, are used to alert the user to special instructions concerning a service or operation that may be hazardous if performed incorrectly or carelessly. The associated risk levels are stated below.

⚠ DANGER	This symbol indicates an imminently hazardous situation which, if not avoided, will result in death or serious injury.
⚠ WARNING	This symbol indicates a potentially hazardous situation which, if not avoided, could result in death or serious injury.
⚠ CAUTION	This symbol indicates a hazardous situation, which if not avoided, could result in minor or moderate injury.
NOTICE	This symbol informs the reader of events not related to personal injury but which there is a risk of damage to property or equipment.
SAFETY INSTRUCTIONS	This symbol informs the reader of safety-related instructions or procedures.

1.2.2 Notice to Installer

Disregarding the following safety measures can result in an accident, causing severe injury to personnel and damage to material assets.

- Only use the product as directed in this manual.
- Never put the product into service if there is evidence of visible damage.
- Never put the product into service before fully completing installation and commissioning.
- Do not carry out any modifications to the product.
- Only use authentic Kobelt spare parts.
- Observe all local regulations, directives and laws during the installation of this product.
- All installation, commissioning, and maintenance work must only be conducted by qualified personnel. (For the purpose of this manual, qualified personnel are persons who are familiar with the assembly, installation, commissioning, and operation of the product and who have the qualifications necessary for their occupation.)
- Observe all specifications in this manual. If these guidelines are not followed and damage occurs, the warranty will be voided.

1.2.3 Product Hazards

⚠WARNING	**Disconnect Power:** Turn off power at distribution panel before beginning installation to protect installer from electrical hazards.

⚠CAUTION	**Voltage and Current Compatibility:** Confirm that the power source is compatible with the maximum voltage and current ratings of is product variant. Failure to do so could result in damage or fire.

2 PRODUCT DESCRIPTION

The Kobelt 7196 Two Speed Jog Lever is used as a control input to electronic and power hydraulic steering systems. The operator can maneuver the vessel by simply jogging the lever port or starboard to activate its internal micro switches. The Jog Lever contains two sets of switches which can be utilized to provide slow and fast control signals to the steering system. The jog lever can also be ordered with duplicate outputs. In this configuration the switch behaves as a single speed jog but with two sets of unitized discrete outputs for systems that require operating redundancy or to drive multiple devices on isolated circuits.

The Jog Lever is well suited for marine steering applications, other marine applications, or industrial installations. The 7196 is designed for indoor and outdoor installation with a robust die cast bronze and stainless-steel construction to provide a long service life in a harsh marine environment.

The 7196 appearance is of a combination of black and chrome. The product contains bottom exit cable glands and standard wiring cables.

2.1 TECHNICAL DATA

Table 1: 7196 Technical Data

MODEL		**7196**	
KOBELT PART #		7196	7196-D
ELECTRICAL CONTACTS		2X SPDT, NO (Normally Open) (per direction)	
MAXIMUM VOLTAGE		250 VAC / 24 VDC	
MAXIMUM CURRENT[1]	12 VDC	6A	
	24 VDC	5A	
	250 VAC	6A	
SUPPLIED CONNECTION:		2X 3C/18 AWG Pigtail, 2m Long	2X 4C/ 24AWG, M8 Male connector, 2m Long
OPERATING TEMPERATURE		-13°F … 158°F [-25°C … 70°C]	
PRODUCT WEIGHT		4.0 lbs [1.8kg]	
INGRESS PROTECTION (IP) RATING		IP56[2] (above dash only)	

[1]Maximum reported current is for an inductive load. Current is per switch contact.
[2]Requirements to achieve IP56:

- Minimum 3/16” [5mm] thick steel dash, or equivalent
- Requires 4x installation screws to be sealed
- IP rating only applies to units manufactured after March 2022

2.2 Model Code Key

Model Code Key

7196 – ☐

Output Type

Blank	= Two Speed
D	= Single Speed, Duplicate Output

3 INSTALLATION

3.1 MECHANICAL

The jog lever should be mounted:

- In a central location at each station on-board the vessel
- With sufficient room for the handle to swing to both extreme positions.
- Within 6 feet [1.8 m] of electrical junction box.
- Placed on horizontal or angled dash surface.
- Placed as to protect external electrical cable from damage.

The jog lever must be mounted on a flat surface with a maximum roughness of ra = 125 micro-inches [500 μm]. The mounting surface must have the following minimum thickness to prevent excessive flexing:

Steel consoles: 0.19 inches [4.8 mm]
Aluminum consoles: 0.27 inches [6.8 mm]

The Jog Lever is equipped with (4) four mounting holes for #10 [M5]. Use #10 or M5 sealing screws or bonded sealing washers to prevent water ingress below the dash. Tighten the fasteners to 23 in-lbs [4 Nm] with an anaerobic thread locker such as Loctite 243. Use the template at the back of this manual to make the correct cut-out on the mounting surface.

3.2 ELECTRICAL

3.2.1 7196 – Standard output

The standard 7196 Jog Lever has a pair of 6 foot [1.8 m] long 3C/18 cables for external connections. Connect the cables to an electrical junction box and the electronic or power hydraulic steering system interface. The product's two 3C/18 electrical cables contain the following wires and related functions:

Table 2: 7196 Wire Connections – Low-Speed

7196				
Wire #	**Wire Name**	**Colour**	**Gauge**	**Function**
1	SWA-NO	Black	18AWG	Connects to COM-AB when Switch A is activated.
2	SWB-NO	White	18AWG	Connects to COM-AB when Switch B is activated.
3	COM-AB	Green	18AWG	COM connection for Switches A and B.

Table 3: 7196 Wire Connections – High-Speed

7196				
Wire #	**Wire Name**	**Colour**	**Gauge**	**Function**
1	SWC-NO	Black	18AWG	Connects to COM-CD when Switch C is activated.
2	SWD-NO	White	18AWG	Connects to COM-CD when Switch D is activated.
3	COM-CD	Green	18AWG	COM connection for Switches C and D.

The cable penetration locations are shown in Figure 1 and the internal wire connections are shown in Figure 2.

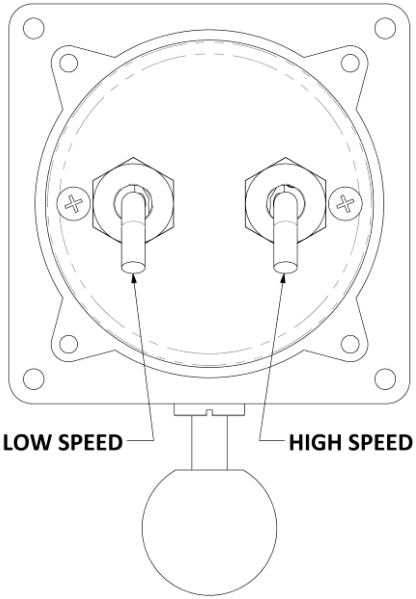

Figure 1: 7196 Cable Penetration Locations

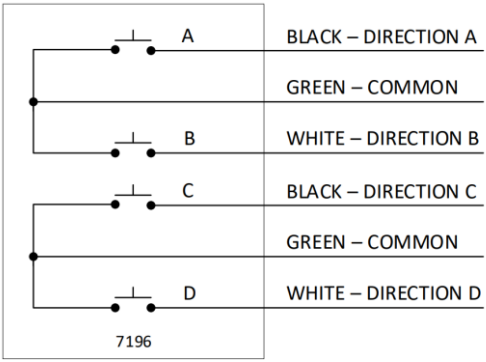

Figure 2: 7196 Internal Wiring Diagram

The operating direction of the Switches in relation to the Jog Lever handle is shown in Figure 3.

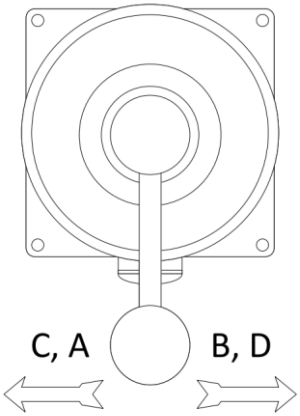

Figure 3: 7196 Switch Direction Diagram

⚠WARNING	Do not operate the Jog Lever if the internal spring has broken. Unexpected operation could result.
NOTICE	This unit contains an internal terminal strip. The supplied external cables can be replaced with installed supplied cables that can be directly connected to the terminal strip with fork terminals if required for the system installation.

3.2.2 7196-D – Duplicate output

The 7196-D jog lever has a pair of M8, 4Pin male connectors on 2m long leads. Each lead provides connection to one set of switches(A-B & C-D). To make electrical connection, it is required to supply a pair of M8, 4 Socket female connectors and make the appropriate connections to the electrical junction box following the pinouts given in Table 4 and Table 5.

Refer to Figure 4 clarification as to which cable lead corresponds to which switch set. Internal wire connections are shown in Figure 5. Refer to Figure 3 for depiction on which switches will actuate when the jog lever is depressed in a particular direction. A pinout diagram of the supplied M8 male connector is shown in Figure 6.

Table 4: 7196-D Wire Connections – Switch Set A-B

7196-D				
Pin #	**Wire Name**	**Colour**	**Gauge**	**Function**
1	SWB-NO	Brown	24AWG	Connects to COM-AB when Switch B is activated.
2	Drain	-	-	Unused
3	SWA-NO	Blue	24AWG	Connects to COM-AB when Switch A is activated.
4	COM-AB	Black	24AWG	COM connection for Switches A and B.

Table 5: 7196-D Wire Connections – Switch Set C-D

7196-D				
Pin #	**Wire Name**	**Colour**	**Gauge**	**Function**
1	SWD-NO	Brown	24AWG	Connects to COM-CD when Switch B is activated.
2	Drain	-	-	Unused
3	SWC-NO	Blue	24AWG	Connects to COM-CD when Switch A is activated.
4	COM-CD	Black	24AWG	COM connection for Switches C and D.

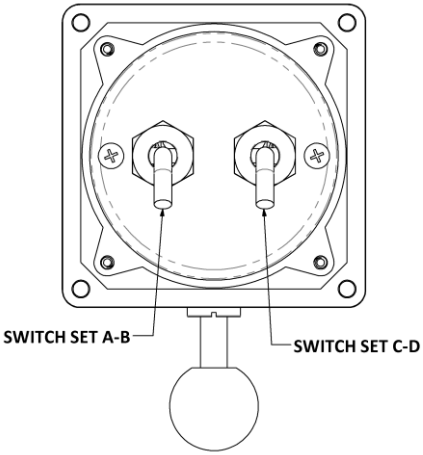

Figure 4: 7196-D Switch Set Cable Location

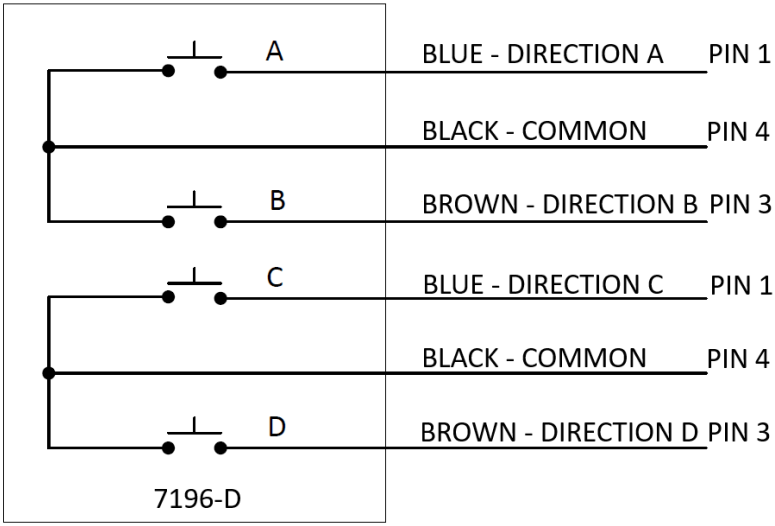

Figure 5: 7196-D Internal Wiring Diagram

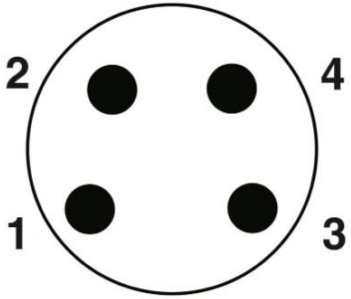

Figure 6: Pin assignment, 7196-D M8 Male connector

4 COMMISSIONING

4.1 ELECTRICAL CHECK

⚠ CAUTION	Ensure that the rear cover is installed and secured before powering on the 7196.

- Confirm that the electrical connections to the 7196 have been made.

4.2 FUNCTIONAL TEST

⚠ CAUTION	The Functional Test should be carried out while the vessel is still at dock and before it is taken out to sea after installation has been completed.

A complete functional test should be performed on the system that the Jog Lever has been installed within before entering operational use.

5 OPERATION

The Kobelt 7196 Two Speed Jog Lever is a spring-return to centre device that provides Non-Follow-Up (NFU) two speed steering control.

It operates in both a Port and Starboard, or Left and Right, direction with a set of microswitches for each direction of travel. When the handle is released by the operator it returns to centre due to the internal spring force.

5.1 7196 STANDARD MODEL OPERATION

The primary application for the Jog Lever is in steering gear control. The first microswitch at 30 degrees activates a solenoid valve providing hydraulic flow to the steering gear. The second microswitch at 45 degrees activates a second solenoid valve providing a faster rudder speed for maneuvering. The same operation is present in the opposite direction but commands the steering gear in the opposite direction.

Releasing the handle results in the steering gear holding position and no longer moving. Two steering (directional control) solenoid valves are required, a rudder feedback unit with limit switches is recommend, but a steering amplifier is not required.

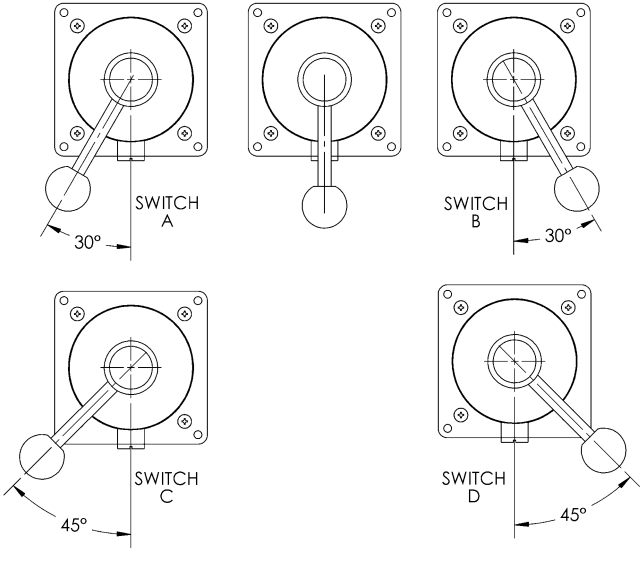

Figure 7: 7196 Positions of Operation, LEFT - CENTRE – RIGHT

5.2 7196-D Duplicate Output Model Operation

The 7196-D differs in operational output to the standard model. In the 7196-D, depressing the jog lever the first 30 degrees actuates both microswitches on one side of the jog lever, changing both switches to a closed state. Continued travel of the jog lever until it contacts the end stop at 45 degrees maintains the closed state of the microswitches.

When the handle is released, the jog lever returns back to its neutral position at center and returns the switches to an open state. The same logic applies when the jog lever is rotated the opposite direction, changing the state of the opposing switches. Refer to Figure 8 for clarification on which switches are toggled at jog lever positions.

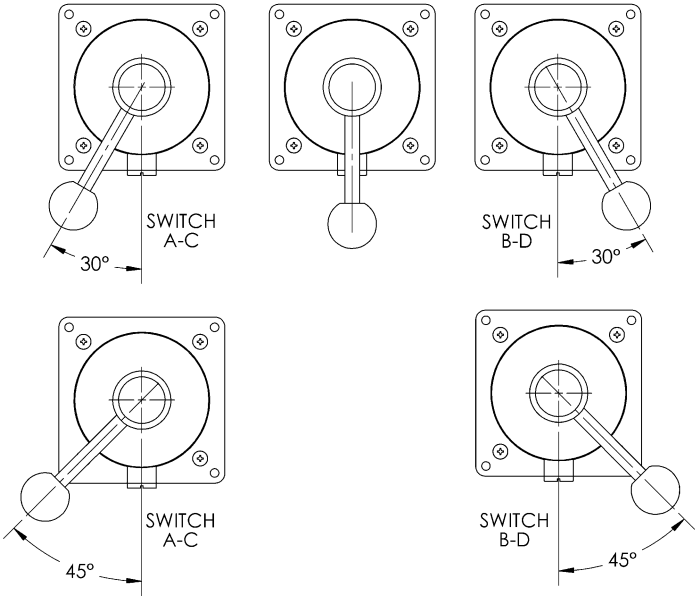

Figure 8: 7196-D Position of Operation, LEFT – CENTER - RIGHT

6 MAINTENANCE

6.1 PREVENTATIVE MAINTENANCE

- Quarterly (4 times per year)
  - Visually inspect wire and cable insulation for splits or damage.
  - Ensure there is no visible corrosion on the unit.
- Every (2) two years
  - Confirm all electrical screw terminals are secured.
  - Confirm cable glands are secured to cables.
  - Replace and lubricate seals.
  - Replace tension spring.

6.2 RECOMMENDED SPARE PARTS AND KITS

As a minimum Kobelt recommends that a spare 7196 Repair Kit be kept on-hand.

Depending on date of purchase, a retro-fit kit may be required to mount the new more robust spring found in the 7196 Repair Kit as of that date. When ordering a retro-fit kit, all the parts of a repair kit are included and should be installed at the same time.

Table 6: Available Kits

QTY	ITEM	KOBELT PART #
1	7196 REPAIR KIT, SEALS AND SPRING	7196-RK
1	REPAIR KIT, MICROSWITCHES, 7196 JOG	7196-RK-01
1	7196 RETRO-FIT KIT	7196-RF

When purchasing spare parts refer to Appendix B: Parts List at the back of this manual for Kobelt component Part Numbers.

NOTICE	It is recommended that any required service work on a Kobelt unit be performed by a factory authorized service representative. Please contact the nearest Kobelt authorized distributor for assistance.

7 TROUBLESHOOTING

If you encounter problems with the operation of your product, please refer to the trouble-shooting suggestions before contacting Kobelt for assistance. If the steps below do not resolve your issue, please reach out either Kobelt directly or our Dealers in your area.

Table 7: Common Solutions

Problem (Issue encountered)	Cause (What it means)	Corrective Action (What to do)
Jog lever action is reversed.	Wiring is backwards.	1. If the low-speed action is reversed, swap the Switch A and Switch B output wires to their respective system connections. 2. If high-speed action is reversed, swap the Switch C and Switch D output wires to their respective system connections.
High-speed activates before low-speed.	The A, B and C, D switch sets are wired in reverse.	1. Swap the wiring connections between the cables extending from the body of the unit. 2. Test the operation to ensure the issue has been resolved.
Jog lever does not move rudder at all.	Wiring is wrong.	1. Check wiring. 2. Refer to system design drawing for proper wiring.
	The rest of the system isn't hooked up correctly.	1. Check system wiring. 2. Confirm wiring to Jog Lever.
	Broken switch or contact.	1. Use a multi-meter to monitor the resistance of the wiring between switch contacts. 2. Check for normal operation of each switch by measuring the connection while jogging the lever. 3. Check all switch directions. Replace any damaged switches.

8 REVISION HISTORY

Document Revision	Release Date	ECN	Author	Revision Summary
E	16/04/2025	01230	GG	• Section 2.1 Technical specifications: Revised maximum microswitch current to show inductive loads. Added connections for 7196-D • Section 2.1: Added description for 7196-D • Added Section 2.2: Model Code key • Added Section 3.2.2: Electrical installation for 7196-D • Section 5.1: Corrected second speed switch angle to 45 degrees, was 55 degrees. • Added Section 5.2: 7196-D operation. • Section 6.2: Added microswitch repair kit 7196-RK-01 • Appendix B; Added washer to microswitch screws, 1023-0102. Replace microswitch, cables with microswitch repair kit. Added 7196-D parts list. • Appendix E: Updated microswitch installation instructions to reflect microswitches coming pre-soldered to cable in repair kit.

9 WARRANTY

Kobelt Manufacturing Co. Ltd. ("Kobelt") warrants the Products and Parts manufactured by Kobelt to be free from defects in workmanship or material and that said products are designed mechanically and functionally to perform to specifications.

This warranty is effective providing:

- The equipment is used within the intended operating conditions and in accordance with Kobelt recommendations
- The equipment is installed according to equipment diagrams, specifications and recommendations which Kobelt has provided

This warranty becomes invalid if the factory supplied serial number has been removed or altered on the product. This warranty does not cover cosmetic damage or damage caused by an act of God, accident, misuse, abuse, negligence or modification of any part of the product. This warranty does not cover damage due to improper operation or maintenance, connection to inappropriate equipment or attempted repair by anyone other than an authorized Kobelt representative.

Upon identification of a potential issue or defect with a Kobelt Product or Part, the Warranty Applicant ("Applicant") must immediately contact Kobelt and describe the issue in writing, by letter, fax, email or other electronic conveyance. Kobelt will then assess the cause of the defect and determine warranty applicability and appropriate remediation.

If any part is found to be defective, Kobelt will replace said part FOB the Kobelt factory provided that any such defective part is returned by the Buyer with freight and applicable forwarding charges prepaid by the Buyer. Kobelt's sole obligation to the Applicant will be to repair or replace the defective part with same or similar product, to a maximum value of the list price of the product or part. The Kobelt warranty does not cover labour charges, travel or any other associated expenses.

All Products and Parts manufactured by Kobelt, are subject to a warranty against manufacturer's defects in materials or workmanship for a period of two (2) years from the date of purchase.

Kobelt will be responsible for all Products or Parts sold by Kobelt but manufactured by 3rd party manufacturing companies. However, these products and parts are subject to applicable 3rd party warranties and may not be the same as the Kobelt warranty.

10 Appendix A: Installation Dimensions

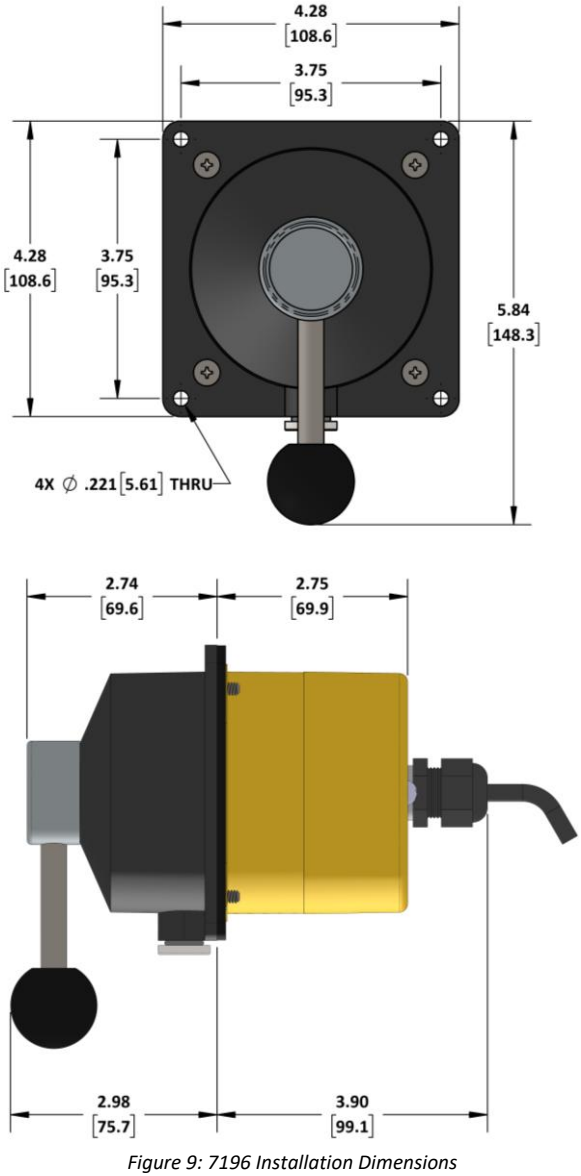

Figure 9: 7196 Installation Dimensions

11 APPENDIX B: PARTS LIST

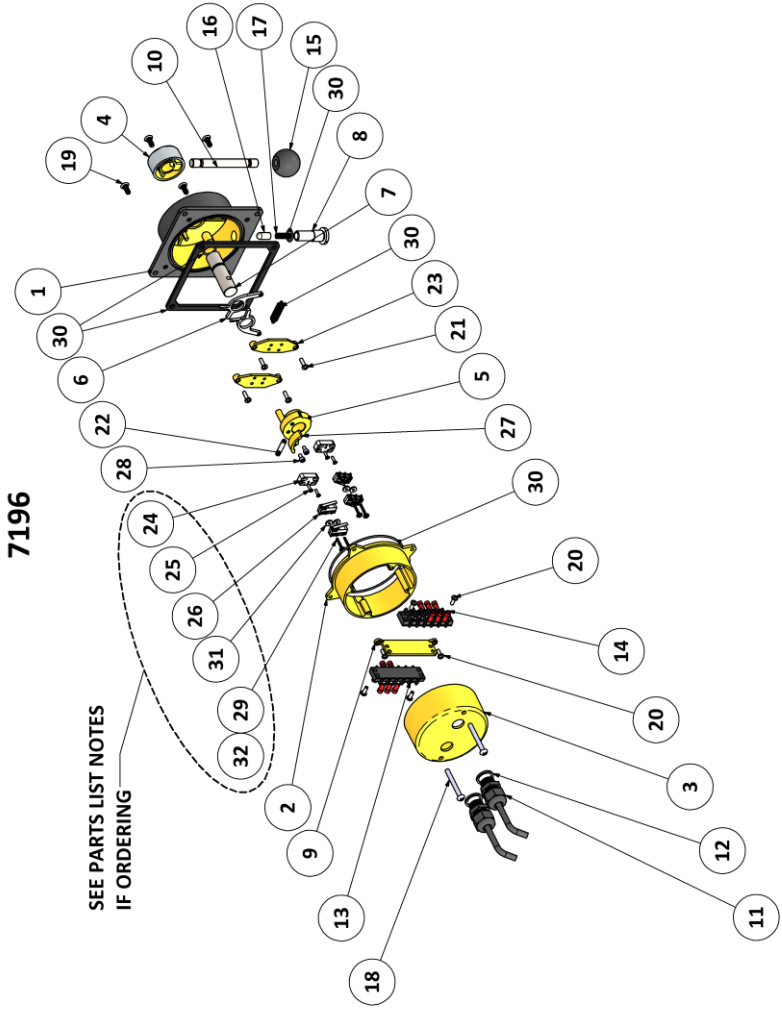

Figure 10: 7196 Parts Diagram

Table 8: 7196 Parts List

		Model Number:	7196	
ITEM	**QTY**	**DESCRIPTION**	**PART NUMBER**	**NOTES (SEC. 11.1)**
1	1	7194-0001-B	HOUSING; TOP; BLACK	-
2	1	7196-0002	HOUSING; MIDDLE	-
3	1	7194-0003	HOUSING, BOTTOM	-
4	1	7194-0004-K	HUB, CHROME	-
5	1	7194-0005	CAM, LARGE	-
6	2	7196-0006	BRACKET, SPRING ARM	-
7	1	7196-0008	SHAFT	-
8	1	7196-0009	DETENT PLUG	-
9	1	7196-0011	BRACKET, TERMINAL BLOCK	-
10	1	7170-0005	HANDLE SHAFT	-
11	2	6001-0248	CABLE GLAND; M16 X 1.5, .197-.394 CABLE, PA6, BLACK	-
12	2	6001-0248-W-M16	WASHER, SEALING, M16, POLYETHYLENE	-
13	2	6009-0005	TERMINAL BLOCK, 140 SERIES, 5 POS, 15A, 250V	-
14	12	6009-6451	FORK TERMINAL, 22-18 AWG, #6 STUD	-
15	1	2030-0001	HANDLE KNOB, SPHERICAL, BLACK	-
16	1	2545-0012	DETENT PIN	-
17	1	1201-0206	SPRING, DETENT	-
18	2	1010-0828	SCREW, RND HD, PHL, 10-24 X 1 3/4, 18-8	-
19	4	1009-0808-S	SCREW, FLAT HD, PHILLIPS, 10-24 X 1/2 X 100DEG, 18-8, W/SEALING ORING	-
20	6	1012-0606	SCREW, PAN HD, PHL DRIVE, 6-32 x 3/8IN, 18-8 SS	-
21	4	1012-0608	SCREW, PAN HD, PHL, #6-32 x 1/2, 18-8	-
22	1	1024-0814	SPRING PIN; 3/16 DIA X 7/8 LG, AISI 420	-
23	2	7196-0007	BRACKET, MICROSWITCH MOUNT	-

24	2	7196-0017	BRACKET, MICROSWITCH, 7196	1
25	4	1009-0306	SCREW, FLT HD PHP, 3-48 X 3/8LG, 18-8	1
26	1	7196-RK-01	REPAIR KIT; MICROSWITCHES; 7196 JOG	1
27	1	7196-0005	CAM, SMALL	-
28	2	1002-0604	CAP SCREW - SCKT HD; #6-32 X 1/4, 18-8	-
29	4	1012-3218	SCREW; PAN HD; PHP DR; M2-4 X 18; 18-8	1
30	1	7196-RK	REPAIR KIT, 7196	-
31	4	1023-0202	WASHER; FLAT; #2 X 5/16 OD; 18-8	1
32	4	1023-0102	WASHER; FLAT; #2 X 1/4 OD; 18-8	1

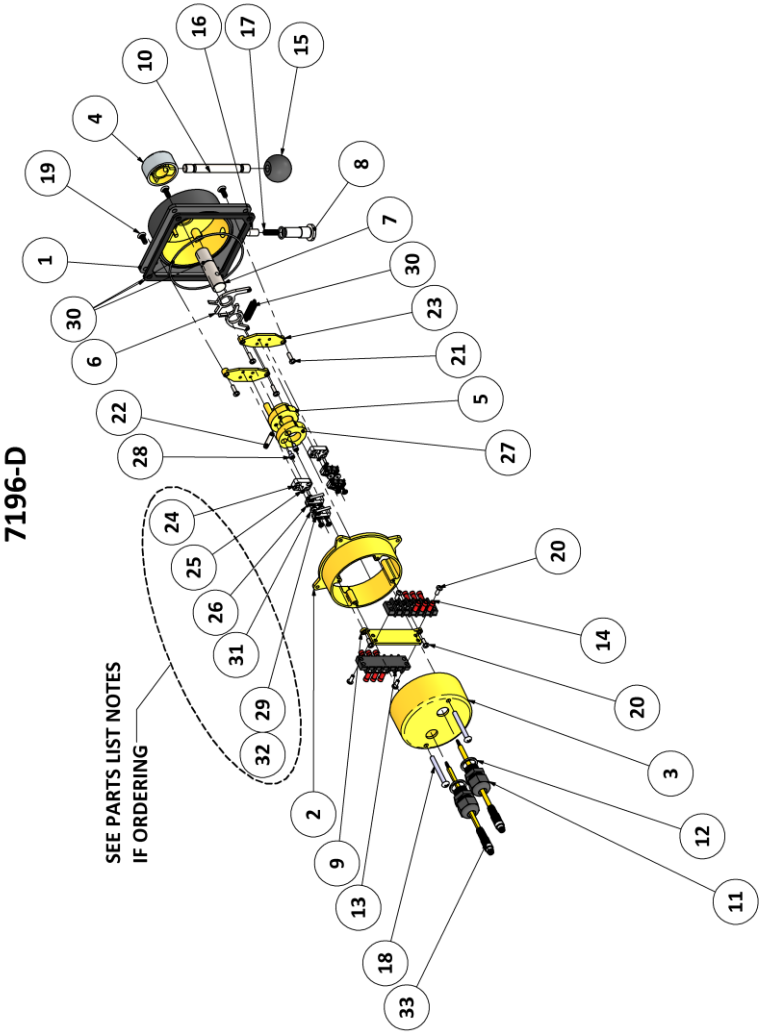

Figure 11: 7196-D BOM

Table 9: 7196-D Parts List

		Model Number:	7196-D	
ITEM	**QTY**	**DESCRIPTION**	**PART NUMBER**	**NOTES (SEC. 11.1)**
1	1	7194-0001-B	HOUSING; TOP; BLACK	-
2	1	7196-0002	HOUSING; MIDDLE	-
3	1	7194-0003	HOUSING, BOTTOM	-
4	1	7194-0004-K	HUB, CHROME	-
5	1	7194-0005	CAM, LARGE	-
6	2	7196-0006	BRACKET, SPRING ARM	-
7	1	7196-0008	SHAFT	-
8	1	7196-0009	DETENT PLUG	-
9	1	7196-0011	BRACKET, TERMINAL BLOCK	-
10	1	7170-0005	HANDLE SHAFT	-
11	2	6001-0248	CABLE GLAND; M16 X 1.5, .197-.394 CABLE, PA6, BLACK	-
12	2	6001-0248-W-M16	WASHER, SEALING, M16, POLYETHYLENE	-
13	2	6009-0005	TERMINAL BLOCK, 140 SERIES, 5 POS, 15A, 250V	-
14	12	6009-6451	FORK TERMINAL, 22-18 AWG, #6 STUD	-
15	1	2030-0001	HANDLE KNOB, SPHERICAL, BLACK	-
16	1	2545-0012	DETENT PIN	-
17	1	1201-0206	SPRING, DETENT	-
18	2	1010-0828	SCREW, RND HD, PHL, 10-24 X 1 3/4, 18-8	-
19	4	1009-0808-S	SCREW, FLAT HD, PHILLIPS, 10-24 X 1/2 X 100DEG, 18-8, W/SEALING ORING	-
20	6	1012-0606	SCREW, PAN HD, PHL DRIVE, 6-32 x 3/8IN, 18-8 SS	-
21	4	1012-0608	SCREW, PAN HD, PHL, #6-32 x 1/2, 18-8	-
22	1	1024-0814	SPRING PIN; 3/16 DIA X 7/8 LG, AISI 420	-

23	2	7196-0007	BRACKET, MICROSWITCH MOUNT	-
24	2	7196-0017	BRACKET, MICROSWITCH, 7196	1
25	4	1009-0306	SCREW, FLT HD PHP, 3-48 X 3/8LG, 18-8	1
26	1	7196-RK-01	REPAIR KIT; MICROSWITCHES; 7196	1
27	1	7194-0105	CAM - JOG LEVER; DUPLICATE OUTPUT	-
28	2	1002-0604	CAP SCREW - SCKT HD; #6-32 X 1/4, 18-8	-
29	4	1012-3218	SCREW; PAN HD; PHP DR; M2-4 X 18; 18-8	1
30	1	7196-RK	REPAIR KIT\ 7196	-
31	4	1023-0202	WASHER; FLAT; #2 X 5/16 OD; 18-8	1
32	4	1023-0102	WASHER; FLAT; #2 X 1/4 OD; 18-8	1
33	2	6014-2024	CABLE; 4C / 24AWG / 105C / M8 PLUG CONNECTOR / 2M LG	-

11.1 Parts List Notes:

1. Contained in Microswitch retrofit kit: 7196-RF-01. See section 14.1 to determine if a retrofit kit is required or can purchase standalone part.

12 Appendix C: Repair Kit Installation

NOTICE	It is recommended that any required service work on a Kobelt unit be performed by a factory authorized service representative. Please contact the nearest Kobelt authorized distributor for assistance.

Steps for replacement of spring and seals:

1. Unthread handle shaft from hub and remove hub.
2. Remove 4 housing screws between front and middle housings.
3. Carefully open unit without stressing any wires.
4. Remove detent plug, take care not to lose internal parts (spring and detent pin).
5. Remove cam assembly.
6. Remove spring arms (with spring attached).
7. Remove and replace large housing O-ring.
8. Remove and replace cam shaft O-ring.
9. Remove and replace detent plug O-ring.
10. Disconnect spring from spring arms.
11. Attach new spring to spring arms.
12. Reassemble unit as shown in Figure 12.
    a. Use Loctite 242 or 243 on handle shaft threads and housing screw threads.
    b. Ensure shaft has sufficient assembly grease for smooth operation (add more if necessary).
    c. Refer to Figure 13 for spring arm orientation/order during re-assembly.

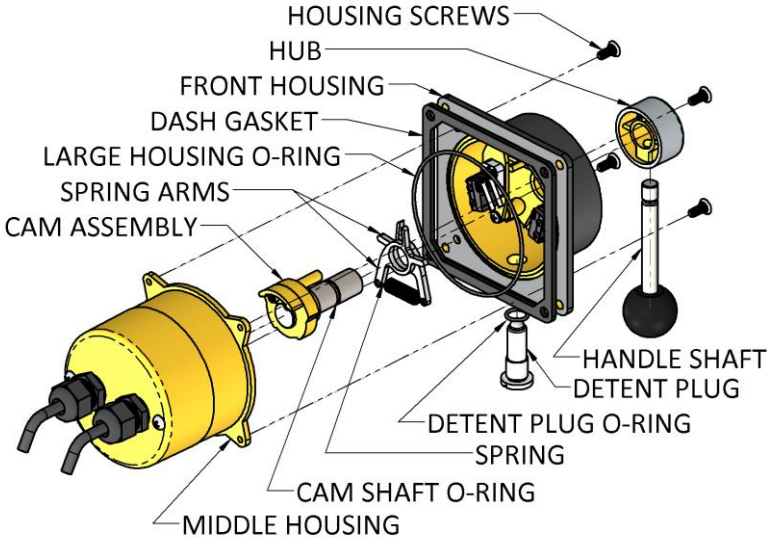

Figure 12: 7196 Parts Diagram for Maintenance

13 Appendix D: Installation of Spring Retro-Fit Kit

NOTICE	It is recommended that any required service work on a Kobelt unit be performed by a factory authorized service representative. Please contact the nearest Kobelt authorized distributor for assistance.

NOTICE	If your Jog Lever contains previous generation Spring Arms, indicated by straight spring arms within the unit, this Retrofit Kit should be applied to the unit during seal and tension spring replacement at the next preventative maintenance cycle.

Steps for Installation of the Retro-Fit Kit parts:

1. Complete Steps 1-6 of outlined in Appendix C: Repair Kit Installation.
2. Discard old spring arms and spring.
3. Attach new spring to new spring arms.
4. Replace old detent spring with new detent spring.
5. Replace O-rings as per Steps 7-9 of outlined in Appendix C: Repair Kit Installation.
6. Reassemble unit as per Step 12 of Appendix C: Repair Kit Installation.

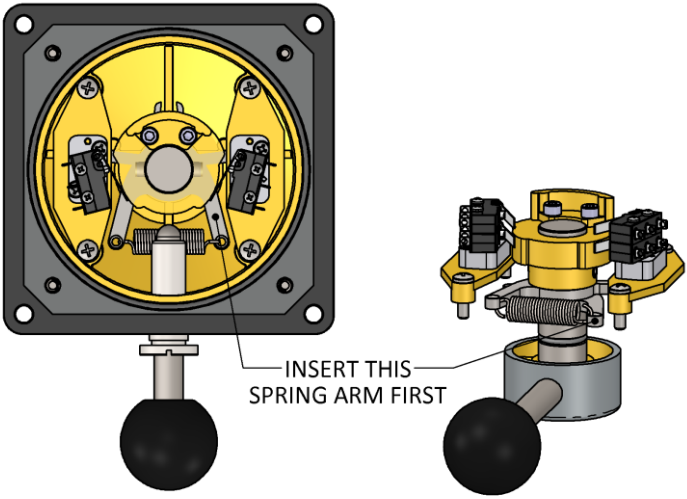

Figure 13: 7196 Spring Arm Order

14 Appendix E: Microswitch Retrofit/Repair Kit Installation

In mid 2023, the old plunger style of microswitch, Kobelt PN: 6001-0104 was replaced with a new microswitch, Kobelt PN: 6001-0112. The older style microswitch is a plunger style microswitch, while the new microswitch is a lever-plunger style. Customers that require a replacement microswitch and currently have the older style will need to perform a retrofit to be able to use the new style microswitch.

14.1 Determination of Microswitch Style

Customers must first determine if their unit has the new or old style of microswitch. Examine the microswitch in your unit and compare to Table 10. If you determine you have the newer style microswitch, Kobelt PN: 6001-0112, you can simply purchase replacement components for the switch and mounting hardware as listed in Table 8 in Appendix B: Parts List.

For customers who identify they have the older style microswitch, Kobelt PN: 6001-0104, they must purchase a retrofit kit, Kobelt PN: 7196-RF-01. This retrofit kit contains the microswitches, and all mounting hardware to replace all the microswitches in the jog lever. Section 14.2 can then be consulted to install the new switches and mounting components in your jog lever unit. Refer to Table 11 for clarification on the components and quantities that are contained in the retrofit kit.

Table 10: Determination of microswitch style

Key Features	Old Microswitch	New Microswitch
Microswitch part number	6001-0104	6001-0112
Picture		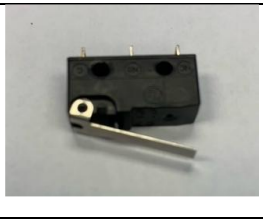
Replacement part number	Retrofit kit, 7196-RF-01.	Microswitch repair kit, 7196-RK-1

14.2 Installation of Microswitch Retrofit/Repair Kit

⚠WARNING	Replacing the microswitches should only be done by Kobelt factory authorized service representatives. Failure to do so could result improper installation and failure of the microswitch
⚠WARNING	Disconnect and isolate all power sources to the jog lever before servicing the jog lever.
NOTICE	Please read through and review steps 1-23 and all figures in section 14.2 before starting the removal of the old microswitch and installation of the new microswitch.

Table 11-Table 13 and Figure 14 list the various components, tools, and specifications required to retrofit/replace the new lever style microswitch in a 7196 jog. If the existing microswitches are simply being replaced with a repair kit, then the steps in section 14.2 involving the microswitch bracket can be ignored. If the old style microswitches are being retrofitted to the new style, then every step in section 14.2 must be followed.

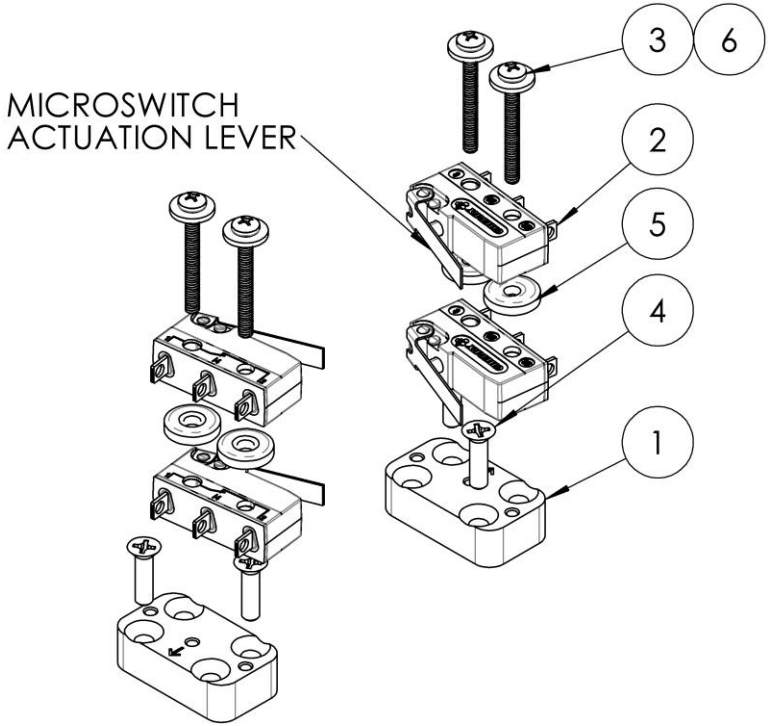

Figure 14: 7196-RF-01 Retrofit kit shown.

Table 11: Bill of materials for Microswitch retrofit kit, 7196-RF-01

7170-RF-01 BOM			
Item	Qty	Part Number	Description
1	2	7196-0017	BRACKET, MICROSWITCH, 7196
2	1	7196-RK-01	REPAIR KIT; MICROSWITCHES; 7196 JOG
3	4	1012-3216	SCREW, PAN HD, PHP DR, M2-0.4 X 16, 18-8
4	4	1009-0306	SCREW, FLAT HD, PHP DR, 3-48 X 3/8LG, 18-8
5	4	1023-0202	WASHER, FLAT, #2 X 5/16 OD, 18-8
6	4	1023-0102	WASHER; FLAT; #2 X 1/4 OD; 18-8

Table 12: Tools and consumables required for microswitch retrofit.

Tool/Consumable	Application
Loctite 243	Fastener retention
No.1 Phillips drive bit	Tightening microswitch and bracket mount screws
Torque screw driver, capable of 1.0 lbs.in [0.11Nm] setting	Tightening microswitch mount screws.

Table 13: Technical specification, microswitch retrofit.

Specification	Value
Microswitch mount screws	1.0 lbs.in [0.11Nm]

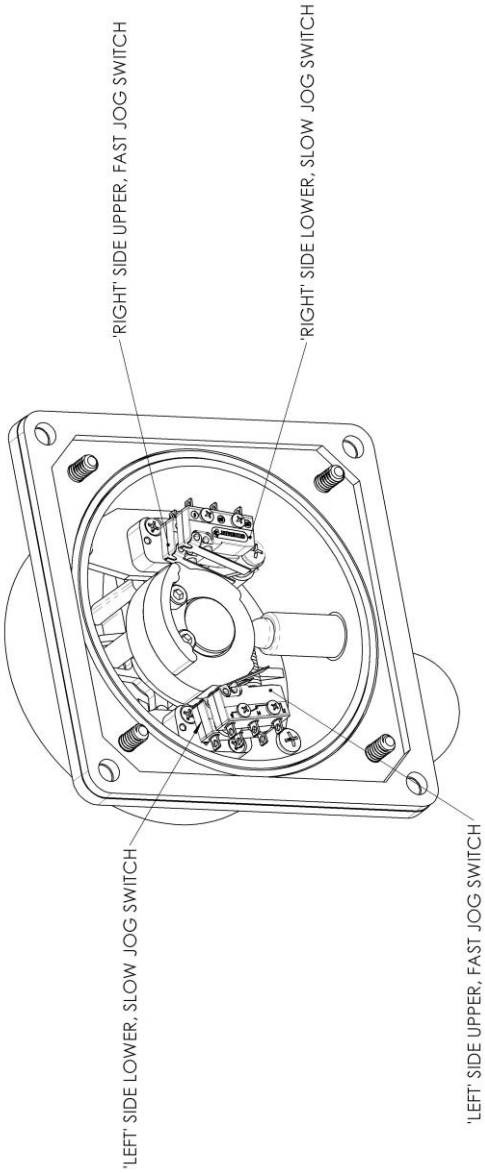

Figure 15: Arrangement of microswitches in jog lever housing

1. Refer to Figure 15 and familiarize yourself with the microswitch positions and what is meant by: left, right, upper and lower switch positions.

2. Loosen off the cable glands and remove the lower housing, sliding it along the external cables until it is out of the way and secured in a manner that it does not put any pressure on the external electrical cables.

3. Note connection of all wires going to the old microswitches prior to disconnecting. It will be imperative to ensure the wires go to the same sides(Left/right) as before or it will reverse the output of the jog lever. Similarly, which side of the terminal block the upper switches go to and which one the lower switches is important. Switching the upper/lower switch connections will reverse the high/low speed functionality.

    a. Note the colour of wires coming from the left side switches (WH/BK):_____.

    b. Note the colour of wires coming from the right side switches (WH/BK):_____.

    c. Refer to Figure 16 and Figure 17; Fill out the side of the terminal block which the upper and lower switches are routed to.

    d. Refer to Figure 16 and Figure 17; Fill out the colour of wire to each of the terminal block positions.

    e. Refer to Figure 16; Use a marking material such as a paint marker to put an indicating mark on the terminal block and housing to ensure terminal block is reinstalled in the same orientation.

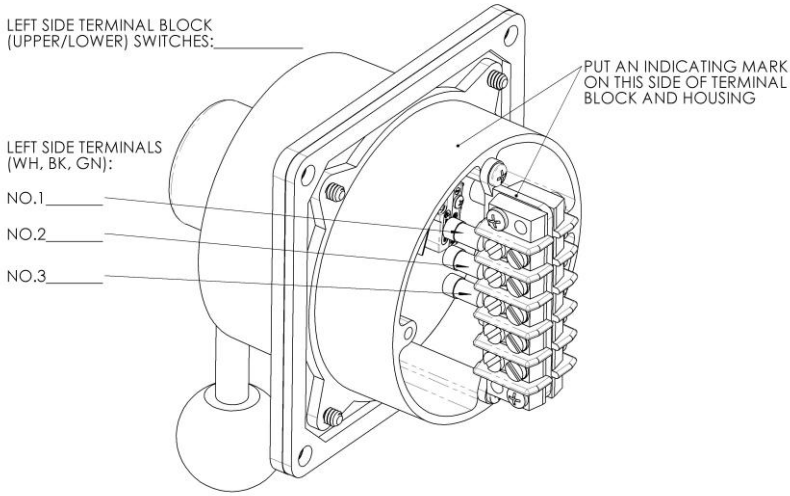

Figure 16: Dual jog left side terminal connections.

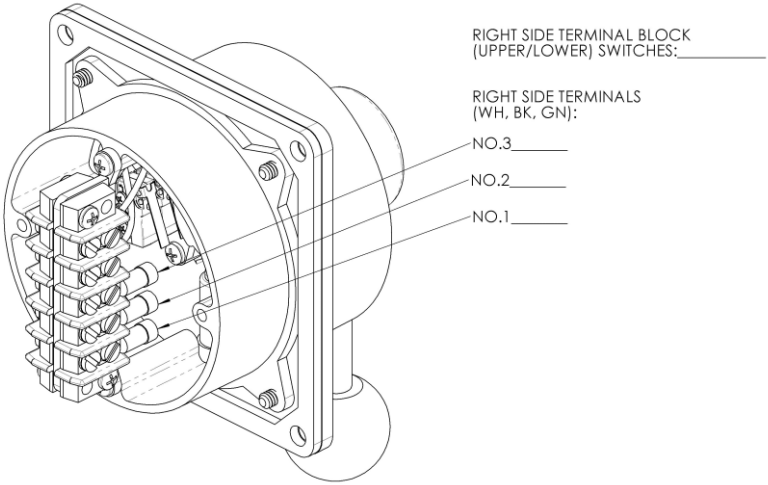

Figure 17: Dual jog right side terminal connections

4. Disconnect the switch wires from the terminal block leaving the external wires attached to the terminal block.

5. Remove the terminal block from the jog unit.

6. Remove and discard the old microswitches and wire leads.

7. Refer to Figure 18 and note the engraved arrow on the microswitch bracket ① is facing outwards on both sides of jog lever.

8. Apply Loctite 243 to X2 Flat head screws ④.

9. Install bracket ① with screws ④ into the jog unit ensuring the engraved arrow is correctly orientated.

10. Refer to Figure 18 and note the orientation of the microswitch② for the side of the jog unit that the microswitch is being replaced on.

11. Place the first microswitch② on top of the bracket① orientating the microswitch so the actuation lever is as shown in Figure 18.

12. Place X2 spacer washers ⑤ on top of the first microswitch lining up with the screw holes.

13. Place the second microswitch② on top of the spacer washers ensuring the same orientation as the first microswitch.

14. Apply Loctite 243 to X2 pan head screws ③.

15. Use X2 screws③ with 2X washers ⑥and tighten to the torque specified in Table 13 to secure the microswitches②.

16. Repeat steps 1-15 for the other side.

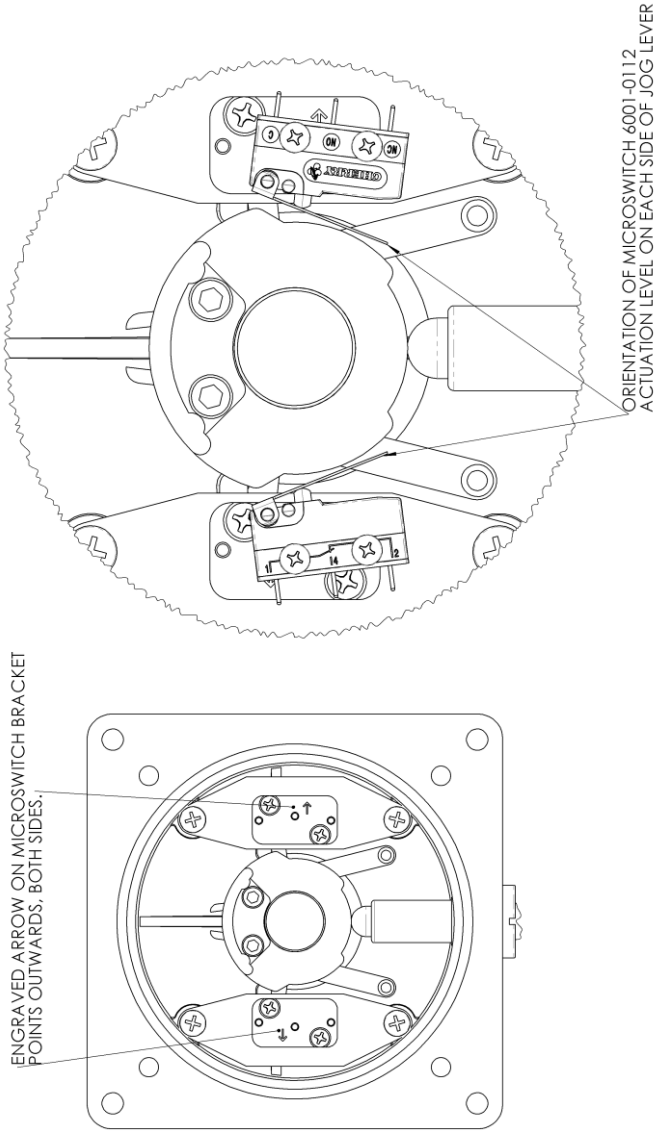

Figure 18: Placement of microswitch and mounting bracket inside jog lever housing

17. Check correct operation of the switches by rotating the jog lever through its full travel, ensure:

    a. The actuation lever of the microswitches② are clear of any obstructions through their range of motion.

    b. The microswitch② lever is depressed enough to actuate the switch contacts when the jog lever is pushed. This can be done by checking for continuity across the Normally Open (N.O) terminal 4 and the Common(C) terminal 1. See Figure 20 for clarity on terminals being checked. When the switch is depressed, terminals 1 and 4 should have continuity. Make sure:

        i. When the jog lever is depressed to the first speed at approximately 30 degrees, the lower switch is closed, and the upper switch is still open.

        ii. When the jog lever is depressed fully, both microswitches should have a closed circuit. The microswitch actuation lever is approximately parallel with the body of the microswitch as shown in Figure 19, 'Maximum lever actuation'

        iii. The microswitch actuation levers are not over actuated, refer to Figure 19.

    c. The microswitch② lever is raised enough to open the switch contacts when the jog is in its default position. This can be done by checking for an open circuit(no continuity) across the Normally Open and Common terminals. When the jog lever is in its rest position, there should be no continuity across terminal 1 and 4 on either microswitch.

    If conditions 'a', 'b', or 'c' are not met, loosen the screws ③ and adjust the microswitch position until conditions are satisfied. Loctite should be reapplied to the microswitch screws if allowed to dry beyond the recommended setup time.

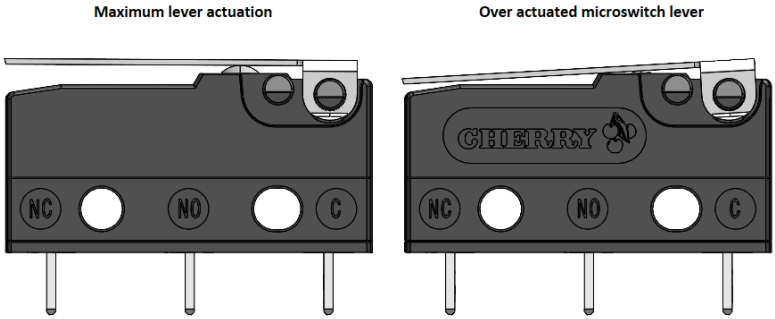

Figure 19: Microswitch actuation positions

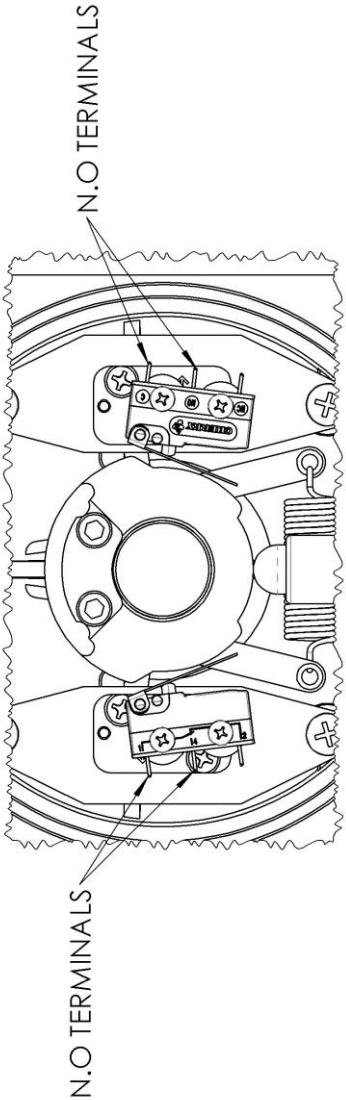

Figure 20: Diagram showing the terminals on each microswitch that make a N.O circuit.

18. The new switch wires must be positioned when installed so that they are clear from any moving parts in the jog unit. In particular, the extension spring, arms and jog cam must be avoided through their entire range of motion.

    For upper switches, it is recommended to route the wires as shown in Figure 21 and Figure 22. For lower switches, the same path can be followed except the wires go to the right side terminal block.

19. Use X2 plastic cable ties to secure the routed wires together in the positions indicated in Figure 21.

20. Install the terminal block ensuring the orientation mark that was put on in step 3.e is on the same side as the housing.

21. Reconnect all the switch wires to the terminal block, refer to Figure 16 and Figure 17 for which wires go to which terminal positions. It is important that the same microswitch (Upper/lower/left/right) goes to the same terminal block number as before. The colors of the of the microswitch wires may not necessarily the same as before.

22. Replace the lower housing and secure the gland nuts.

23. Refer to section 3.2.2 for recommissioning the jog unit.

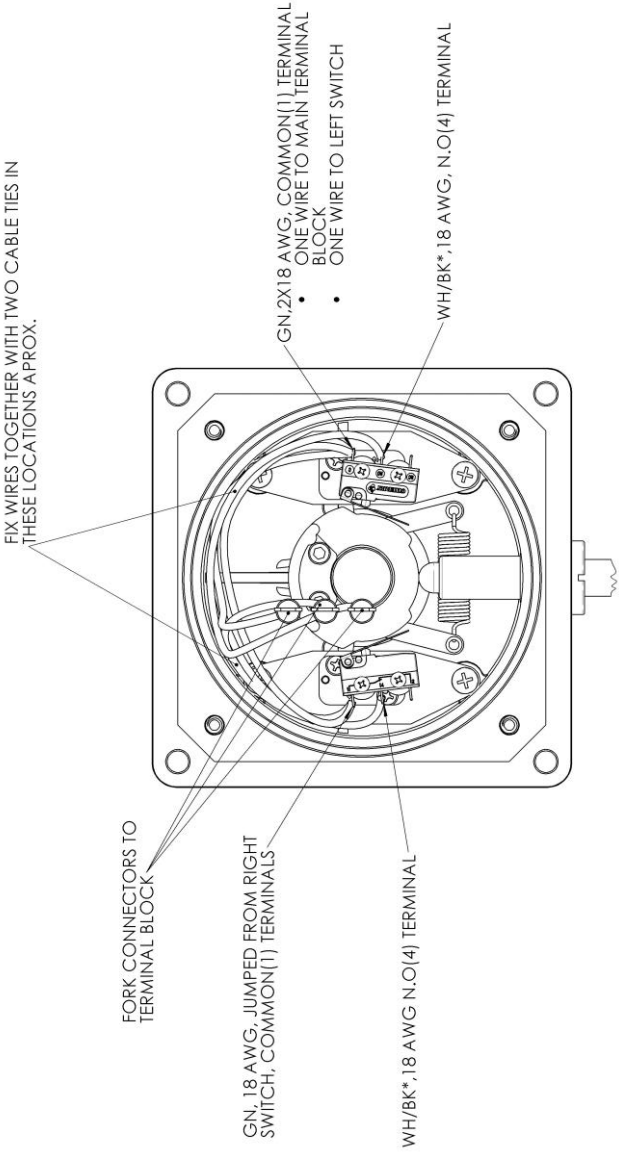

Figure 21: Wiring diagram from upper switches

*Refer to step 3.a and 3.b for which colour wire goes to which side

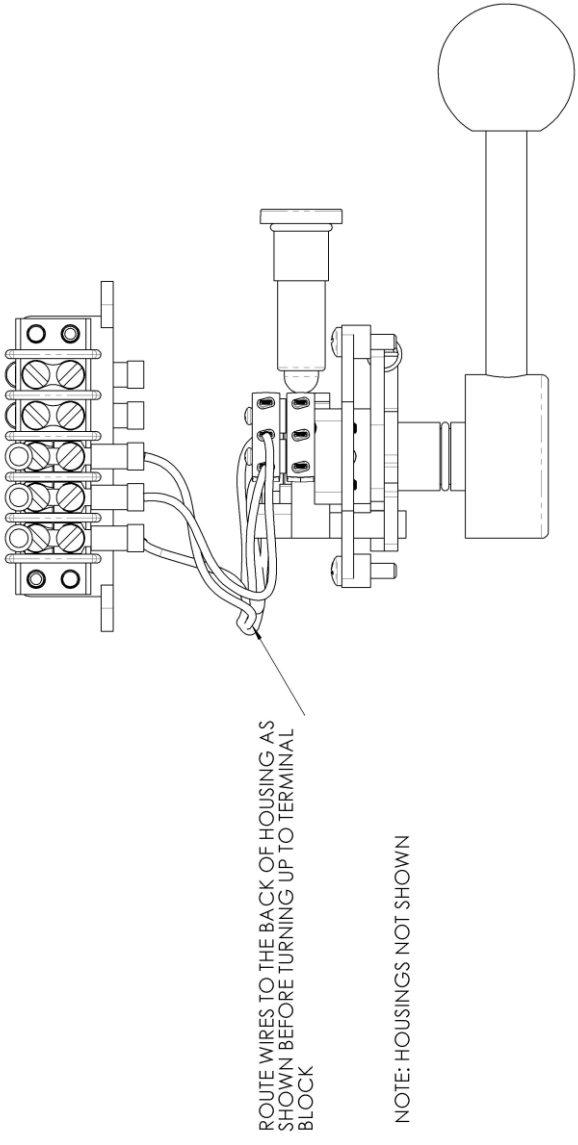

Figure 22: Wiring diagram for upper switches, main terminal block

Page Intentionally Left Blank

15 Appendix E: Installation Cut-out Template

NOTICE	Scale may not be exactly 1:1 due to PDF and printer scaling. Verify primary dimension with a ruler after printing and before using to cut.

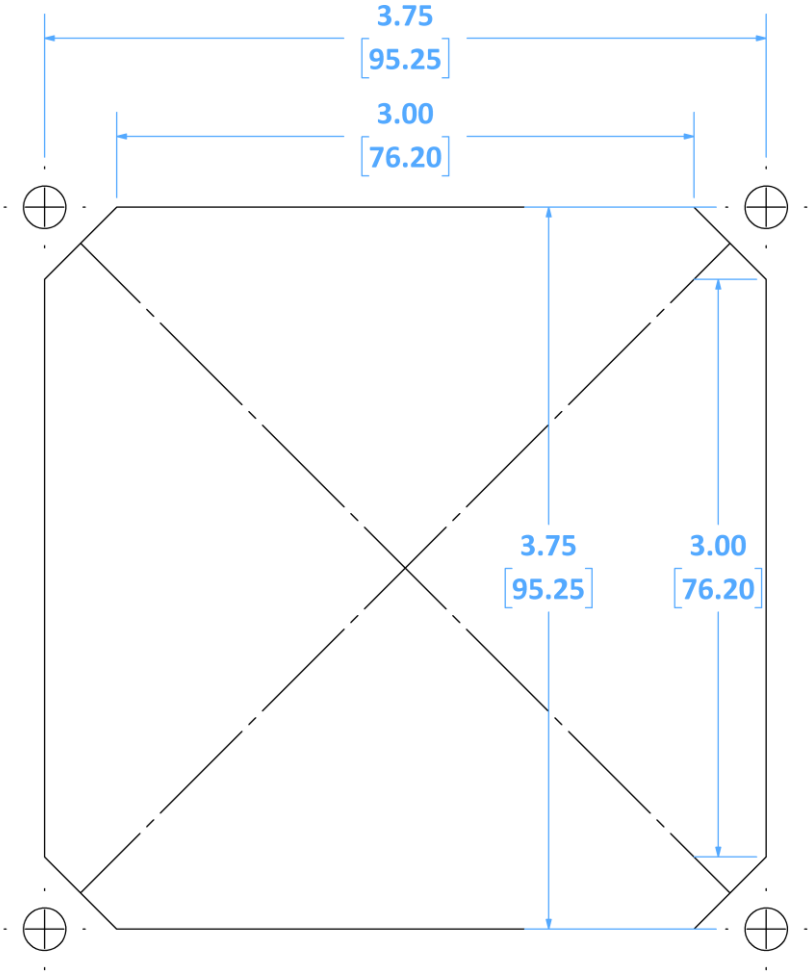

Figure 23: Installation Cut-out Template

This page intentionally left blank

Kobelt Manufacturing Co. Ltd.
8238 129th Street
Surrey, British Columbia,
Canada, V3W 0A6

Sales Tel: +1-604-572-3935
Fax: +1-604-590-8313
Email: sales@kobelt.com
Website: www.kobelt.com

Made in Canada / Printed in Canada