HRP35 Accu-Steer Hydraulic Reversing Pump-Set

Owner's Operation, Installation & Maintenance Manual



Accu-Steer

Kobelt Manufacturing Co. Ltd.

NOTES:

RECORD DATA BEFORE INSTALLATION FOR FUTURE REFERENCE	
Model #:	
Serial #:	
Date of Purchase:	
Date of Installation:	

TABLE OF CONTENTS

s

1 Introduction 4
1.1 Contact 4
1.2 Safety 4
2 Product Description 6
2.1 Technical Data 7
3 Operation 9
4 Installation 11
4.1 Mechanical 11
4.2 Hydraulic 11
4.3 Electrical 13
5 Commissioning 19
5.1 Hydraulic Fill & Bleed 19
5.2 Electrical Check 19
5.3 Functional Test 19
5.4 Overload Adjustment 20
6 Maintenance 22
6.1 Preventative Maintenance 22
6.2 Recommended Spare Parts 22
7 Troubleshooting 23
8 Warranty 24
9 Appendix A: Installation Dimensions 25
10 Appendix B: Pump Parts List 26
11 Appendix C: Manifold Assembly Parts 28
12 Appendix D: Typical System Arrangement 30
13 Appendix E: Brush Replacement 31
14 Appendix F: Shaft Seal Replacement 32
15 Revision History 33

1 INTRODUCTION

1.1 CONTACT

Kobelt Manufacturing Co. Ltd.
8238 129th Street
Surrey, British Columbia
Canada, V3W 0A6

Sales Tel: +1-604-572-3935
Fax: +1-604-590-8313
Email: sales@kobelt.com
Website: www.kobelt.com

This document is intended to clearly present comprehensive product data and provide technical information to assist the end user in design applications. Kobelt reserves the right, without notice, to change the design, or construction, of any products and to discontinue or limit distribution of any products. Kobelt also reserves the right to change, or update, without notice, any technical information contained within this document.

Kobelt recommends that customers visit our website to check for updates to this Manual. Once a product has been selected for use, it should be tested by the user to ensure proper function in all possible applications. For further instructions, please contact our distributors or visit our website.

1.2 SAFETY

1.2.1 Safety Alerts

Throughout this manual, the following symbols, and their accompanying explanation, are used to alert the user to special instructions concerning a service or operation that may be hazardous if performed incorrectly or carelessly. The associated risk levels are stated below.

⚠ DANGER	This symbol indicates an imminently hazardous situation which, if not avoided, will result in death or serious injury.
⚠ WARNING	This symbol indicates a potentially hazardous situation which, if not avoided, could result in death or serious injury.
⚠ CAUTION	This symbol indicates a hazardous situation, which if not avoided, could result in minor or moderate injury.
NOTICE	This symbol informs the reader of events not related to personal injury but which there is a risk of damage to property or equipment.
SAFETY INSTRUCTIONS	This symbol informs the reader of safety-related instructions or procedures.

1.2.2 Notice to Installer

Disregarding the following safety measures can result in an accident causing severe injury to personnel and damage to material assets.

- Only use the product as directed in this manual.
- Never put the product into service if there is evidence of visible damage.
- Never put the product into service before fully completing installation and commissioning.
- Do not carry out any modifications to the product.
- Only use authentic Kobelt spare parts.
- Observe all local regulations, directives and laws during the installation of this product.
- All installation, commissioning, and maintenance work must only be conducted by qualified personnel. (For the purpose of this manual, qualified personnel are persons who are familiar with the assembly, installation, commissioning, and operation of the product and who have the qualifications necessary for their occupation.)
- Observe all specifications in this manual. If these guidelines are not followed and damage occurs, the warranty will be voided.

1.2.3 Product Hazards

⚠WARNING	**High Pressure Operation:** This HRP unit generates high pressure hydraulics. Ensure all power sources are locked out prior to performing work.

⚠WARNING	**Equipment Starts Automatically:** HRP units are controlled remotely and may activate suddenly causing bodily harm. Ensure all power sources are locked out prior to performing work.

⚠WARNING	**Disconnect Power:** Turn off power at distribution panel before beginning installation to protect installer from electrical hazards.

⚠CAUTION	**Voltage Compatibility:** Confirm that the power supply voltage is compatible with the voltage rating of the product variant. Connection of the wrong supply could cause fire or damage.

2 PRODUCT DESCRIPTION

The HRP35 is a complete pump assembly consisting of a reversing gerotor gear pump, hydraulic lock valves, built-in pressure relief, flow control, suction, make-up check valves, a valve housing manifold and an electric permanent magnet motor.

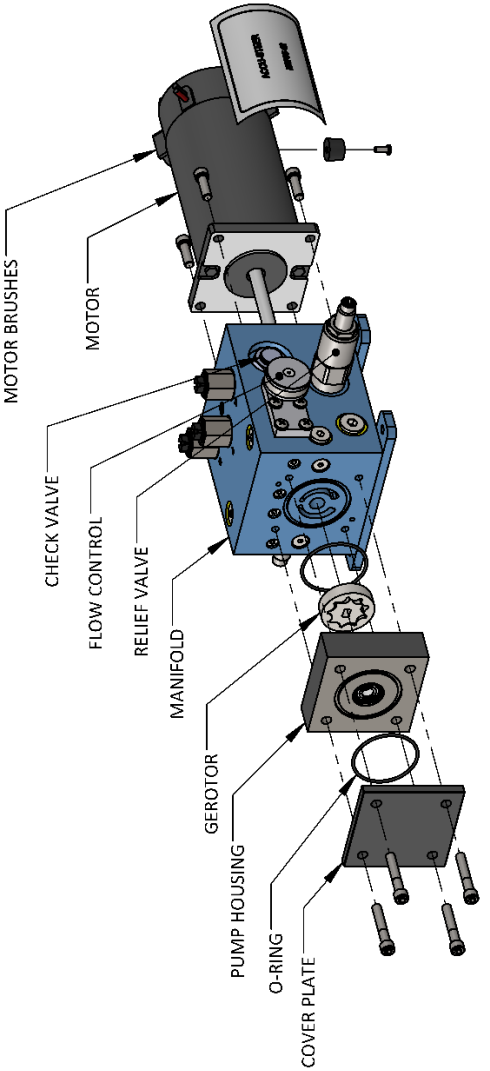

Figure 1: HRP35 Overview Diagram

2.1 TECHNICAL DATA

Table 1: HRP35 Technical Data

MODEL	HRP35-12	HRP35-24
KOBELT PART #	600-101	600-102
NOMINAL VOLTAGE	12 VDC	24 VDC
NO LOAD CONT. CURRENT	11 A	6 A
HARDCOVER CURRENT[1]	35 A	19 A
RECOMMENDED OVERLOAD PROTECTION[2]	18 A	7A
OUTPUT FLOW RATE	3.5 in^3/sec [57 cc/sec]	
MAXIMUM OUTPUT PRESSURE	500 PSI [35 bar]	
MAXIMUM ALLOWABLE BACK PRESSURE • **A & B PORTS** • **T PORT**	1000 PSI [70 bar] 50 PSI [3.4 bar]	
CYLINDER CAPACITY	35 - 60 in^3 [573 - 983 cc]	
INTERMITTENT SERVICE DUTY AT HARD OVER	6%	15%
RECOMMENDED FLUID	ISO VG 32, VI 60 Hydraulic Oil	
PORT SIZES AT MANIFOLD BODY	-06 SAE ORB	
PORT ADAPTERS	-06 SAE ORB TO 1/4" NPT	
AMBIENT OPERATING TEMPERATURE	14 … 122°F [-10 … 50°C]	
PRODUCT WEIGHT	20 lbs [9.1 kg]	
MOTOR WIRE LEADS	14 AWG: 5 feet [1.5 m]	
MOTOR APPROVALS	Ignition Protected: UL-1500, SAE-1171	

1. Typical motor current at maximum output pressure.
2. Recommended thermal overload current setting to prevent dangerous over heating. Thermal overloads must be wired in series with a fuse or circuit breaker for short circuit protection. Circuit breakers must be sized per overload manufacturer recommendations and expected hard over current.

2.1.1 Cylinder Compatibility

The HRP35 works with both balanced and unbalanced cylinders. When unbalanced cylinders are used it is recommended that a vented header tank is used to allow for the expansion and contraction from the unbalanced cylinder.

2.1.2 Duty Cycle

The HRP pump-set is designed as an intermittently operated unit for normal steering applications. High demand applications will over work the motor and cause over heating. Recommended duty cycles are given in Table 1.

2.1.3 Temperature Limits

The motor temperature has a maximum limit of 248°F [120°C]. Allowing the temperature to exceed this limit will permanently damage the motor windings.

The maximum oil temperature limit is 149°F [65°C].

Observe the ambient temperature range of Table 1. Do not operate the unit if the ambient temperature where the unit is located exceeds this limit.

2.1.4 Pressure Range

The normal operating output pressure of the HRP35 is 0 to 500 psi. Avoid operating the unit against the rudder stops for prolonged periods of time.

The maximum back pressure that can be allowed at port 'A' and 'B' is 1000 psi and 50psi at port T. Exceeding these values may result in leaking through the internal check valves in the HRP35.

2.1.5 Recommended overload tripping

When the HRP is dwelling in a hard over condition, thermal overloads should be adjusted to ensure that the HRP trips within:

HRP35-12: 60-180s.

HRP35-24: 60-120s.

An overload adjustment procedure is given in section 5.4.

3 OPERATION

The Kobelt HRP Hydraulic Reversing Pump-sets are designed to interface a hydraulic steering system with electric or autopilot control. The output flow rate of the pump set determines the actuation speed of the steering cylinder.

Lines A and B are the output (Port and Starboard) lines, which are connected to steering lines on the vessel. Line T is the tank suction make-up or return line. These lines are clearly marked on the valve housing. Do not connect the output lines to the tank (T) port.

NOTICE	The pressure relief valve is factory set. It is adjusted to the motors current draw. It should NOT be adjusted in the field.

The HRP35 (Hydraulic Reversing Pump-set) operates as follows (reference numbers below refer to Figure 2):

- As the motor (1) rotates CCW, oil from the gear pump (2) is pumped towards output “A”.
- Output flow is controlled by flow control valve (3).
- Pressure relief valve (5) is factory set to approximately 500 psi (internal setting).
- Excess flow is controlled by differential bypass valve (6).
- This oil passes through the P.O. check valve (7) and goes to the line output “A”.
- Pressure developed in the check valve (7) manually opens the opposite check valve (8).
- When the pump stops turning all spring-loaded check valves return to the normally closed position.
- When the motor (1) rotates (CW) the reverse movement of the oil and valves take place.
- The steering system pressure at output “A” or “B” ensures the check valves (7) and (8) stay closed. These valves are commonly referred to as lock valves.
- If the suction pressure at the pump is less than the pressure in the make-up line, oil from the make-up line will pass by the check valves (4). This minimizes any cavitation due to any air that may be in the steering line.

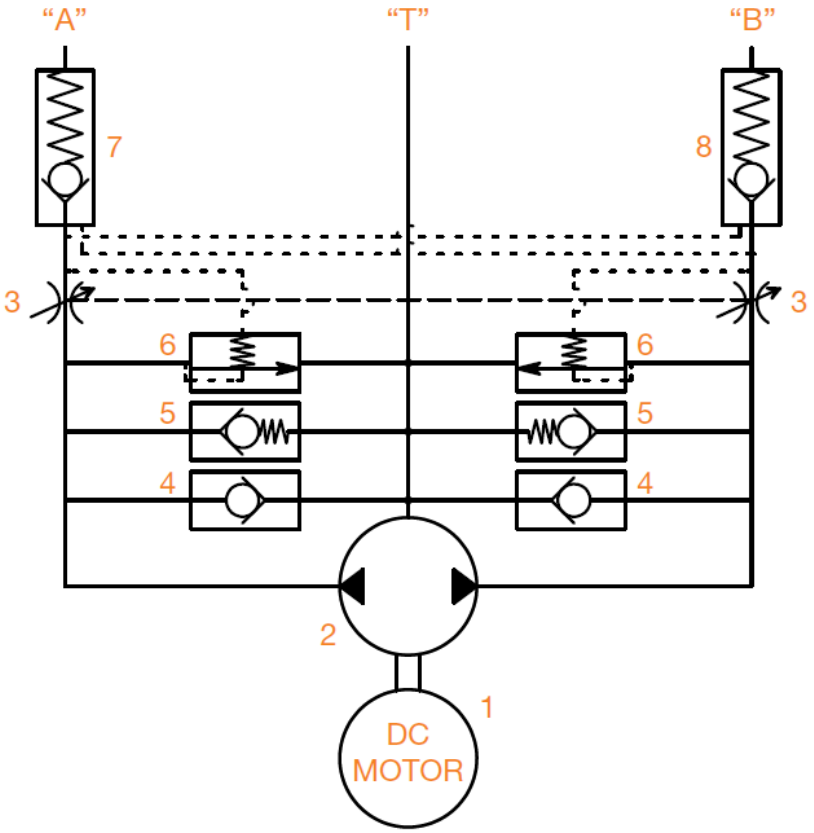

Figure 2: Internal Hydraulic Schematic

4 INSTALLATION

4.1 MECHANICAL

Ideally, the location of the pump-set should satisfy the following conditions:

- Within 6 feet [1.8 m] of the steering cylinder.
- Below the steering cylinder for ease of connections and bleeding.
- Placed on a horizontal shelf or bracket.
- Not exposed to direct sunlight or any source of heat.
- Provide a foundation sturdy enough to prevent the transmission of excessive vibrations.

The HRP35 is equipped with (4) four clearance holes for #10 (M5) bolts through the mounting feet. Ensure that the unit is securely fastened to a suitable foundation.

4.2 HYDRAULIC

The HRP pump-sets are equipped with a fitting with a 1/4" NPT port that are plugged for shipping.

NOTICE	Ensure the plugs remain in place until the unit is ready for connection.

NOTICE	All piping and hoses must be flushed prior to connection. Failure to do so can result in damaged components and seals.

The three hydraulic ports on the valve block are fitted with 1/4" NPT (National Pipe Thread) adapters. If preferred, the adapters can be removed, and connections can be made directly to the valve blocks -06 SAE ORB ports. When installing the hydraulic fitting in the 1/4" NPT port a pipe thread sealant such as Teflon paste must be used.

NOTICE	All hoses and piping must also be plugged or capped until ready for connection.

The piping to the steering cylinder should be 3/8” nominal size and no less than 1/4” with a suitable wall thickness to safely withstand the operating pressure. The Port and Starboard steering lines should have a pressure rating of 1000 psi minimum. Secure the piping against vibration with pipe clamps spaced every 3 feet [1 m] minimum.

The connections to the pump-set must be made by hoses of suitable rating to accommodate any movements, vibration, or thermal strain. Hoses are also required to prevent any pump noise from being transmitted to the steering system.

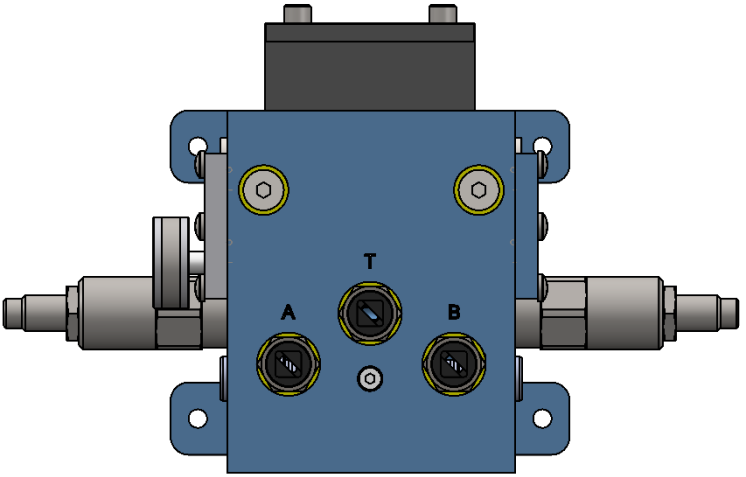

Figure 3: Connections in Top Face of Hydraulic Manifold

Three hydraulic connections are required to the pump-set:

- Connect ports 'A' & 'B' to the steering cylinder ports. It is not critical to identify which of the steering lines is port or starboard as most new autopilots will determine the pump direction and program the drive outputs to suit.
- Connect the 'T' port to the header tank or helm pump case. This third line is critical, as it provides make up oil and allows the pump-set to vent any air, which may enter the pump-set from the steering lines.

Shut-off or isolation valves for all five lines are recommended. If the pump-set fails, the isolation valves can be shut off and manual steering maintained.

If more than one helm pump is used, a return/fill line must be installed to connect the cases of all the helm pumps together.

With steering systems where the fill/interconnect line is pressurized (e.g. - Hynautics or Teleflex) the recommended operating pressure is approximately 20 to 25 psi. The plumbing is connected as noted by the port names on the top of the unit shown in Figure 3.

NOTICE	The shaft seal on the HRP pump-sets are rated to 50 psi. Exceeding this pressure with cause a shaft seal failure and void the warranty.

NOTICE	Do not connect the output lines (Cylinder) to the tank (T) port. Failure to observe this caution will cause a shaft seal failure and void the warranty.

NOTICE	For NPT connection do not use Teflon Tape. Always use Loctite 567 (Liquid Teflon).

4.3 ELECTRICAL

The motor has two 5 feet [1.5 m] long 14 AWG wire leads (1 Red and 1 Black). Connect them to an autopilot pump driver junction box or electrical steering interface.

The minimum arrangement required to electrically operate the HRP is shown in Figure 4. This consists of a main contactor and thermal overload at “C1” and “OL1” respectively to provide the connection to the vessels main power supply. A secondary reversing contactor is required to reverse the polarity of the motor to provide bi-directional fluid flow. The input leads to the control circuit can be connected to an autopilot system as described in section 4.3.1 or a jog style control as described in section 4.3.2.

The overload should be sized to trip the HRP as stipulated in section 2.1.5. Suggested initial overload settings are given in Table 1. The overload should then go through an adjustment procedure given in section 5.4.

A circuit breaker, shown as “CB1” in Figure 4, is also required on the main power lead. This circuit breaker protects the equipment in the event of a short circuit, as the thermal overload will typically have a time delay before isolating the circuit. Sizing of the circuit breaker should be done as recommended by the thermal overload manufacturer to prevent damage to the overload during a large overcurrent condition. The circuit breaker must be sized so it’s fast acting portion (Magnetic trip curve) will protect the overload in the event of a short circuit or severe overcurrent. Heed must be given though to the maximum hard over current specified in Table 1, circuit breakers should be sized so the fast trip is above this value.

It is recommended that protection diodes be applied across the relay coils if they are not integrated into the relays selected for this application.

Ensure that electrical cable used is sized property to prevent excessive voltage drop. Refer to your local marine standards or other local governing wiring codes for guidance.

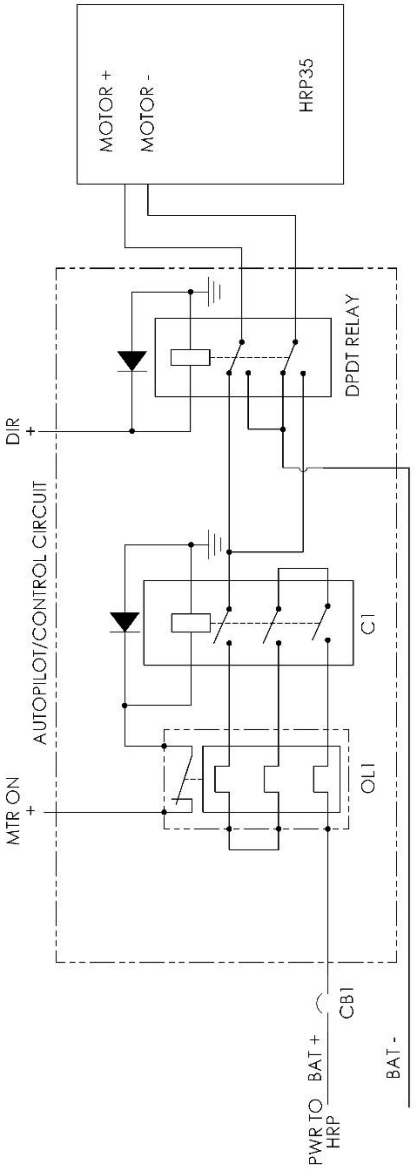

Figure 4: HRP Basic recommended wiring schematic

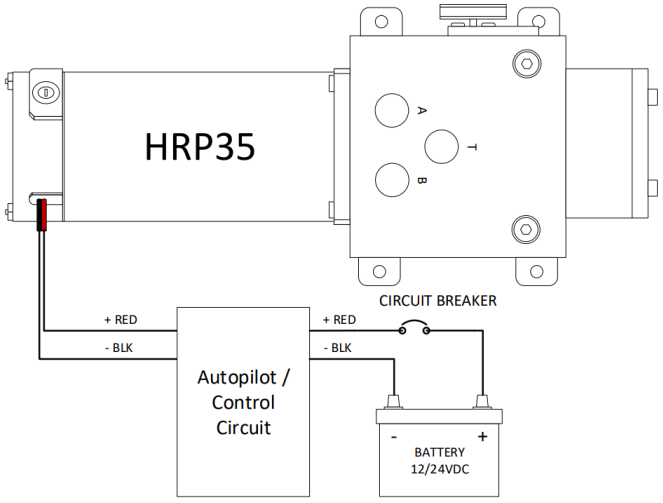

Figure 5: HRP35 Wiring Diagram

4.3.1 Autopilot Connection

The HRP can be directly connected to autopilots that support the current required of the HRP motor. The voltage supported is either 12VDC or 24VDC respective of the model variant being installed.

Example autopilot wiring diagrams are provided for reference below in Figure 6 thru Figure 8.

NOTICE	Remember to always follow the installation guidelines as provided by your autopilot manufacturers' manual.

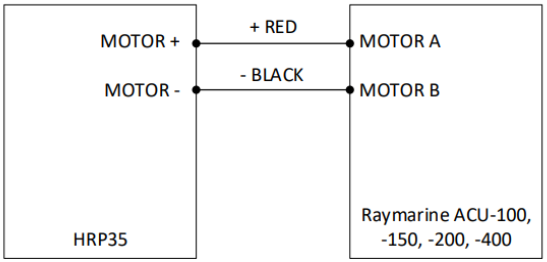

Figure 6: Example Autopilot Connection - Raymarine ACU-100, -150, -200, -400

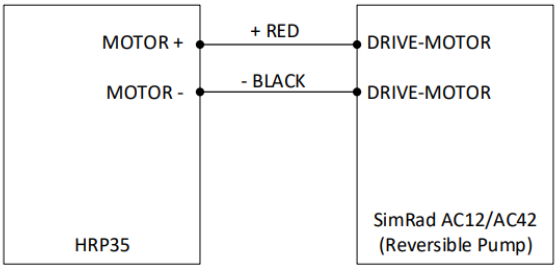

Figure 7: Example Autopilot Connection - SimRad AC12/AC42

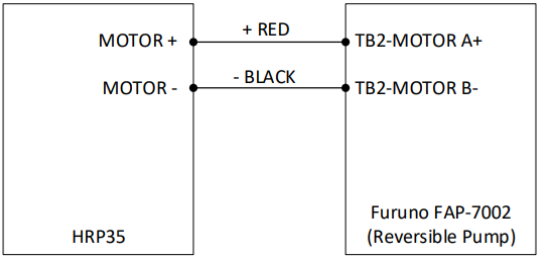

Figure 8: Example Autopilot Connection - Furuno FAP-7002

4.3.2 Jog Lever Connection

Alternatively, the HRP can be controlled from a Jog Lever, such as the Kobelt 7170. The control voltages supported depend on the power relays selected and HRP variant used. A sample configuration for wiring of an HRP and Kobelt 7170 Jog Lever is shown in Figure 9.

NOTICE	It is recommended that any design and implementation of such a system be performed by a Certified Marine Installer or Kobelt Distributor.

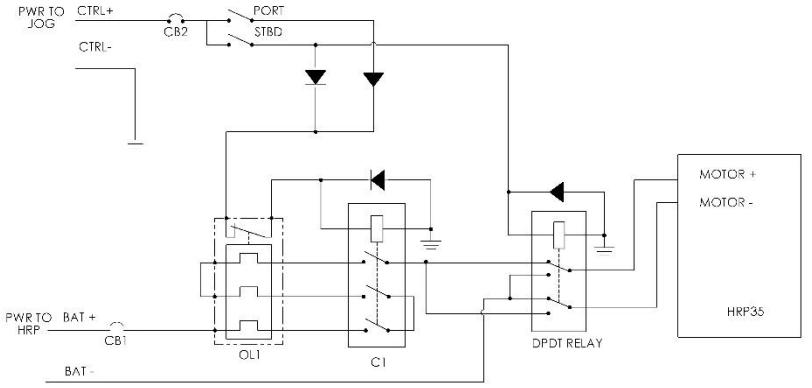

Figure 9: HRP Jog Lever Control Wiring Diagram

The power supply to the jog and HRP should be protected with appropriate circuit breakers as per local codes. If only a single battery power source if available, then they can be tied together at the supply source.

Diodes are required to isolate control signals to the power control relay. It is also recommended that protection diodes be applied across the relay coils if they are not integrated into the relays selected for this application.

4.3.3 EMC Installation Guidelines

In some installations, operation of the pump motor may generate electromagnetic interference (EMI) or radio frequency interference (RFI) that can affect nearby communication, navigation, or radio equipment.

To reduce conducted and radiated emissions, it is recommended that an EMI/RFI suppression capacitor be installed directly across the motor power terminals. The capacitor should be mounted as close to the motor as practical and connected across the positive and negative motor leads. Refer to Table 2 for recommended capacitor specifications and part numbers. Where EMC is critical, motor power cables should be kept as short as practical and routed separately from communication, radio, antenna, and navigation system wiring.

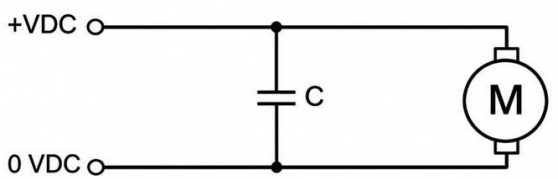

Some recommended part numbers are listed in the table below.

Table 2: Recommended EMI/RFI Suppression Capacitors

Manufacturer	MPN	Kobelt Part Number
Panasonic	ECQ-E2224KF	6003-0102
TDK	FA26X7R2A224KNU06	-



Electromagnetic Interference: Failure to follow these recommendations may result in increased susceptibility to EMI/RFI and could affect the performance of nearby electronic equipment.

5 COMMISSIONING

5.1 HYDRAULIC FILL & BLEED

- Open all valves, if installed, after the hydraulic connections have been made.
- Fill the steering system with an anti-wear petroleum-based fluid appropriate for the service conditions as recommended.
- Allow sufficient time for the pump and lines to fill with oil.

5.2 ELECTRICAL CHECK

- Confirm that the electrical connections to the Autopilot have been made.
- Confirm that an overload has been installed correctly and is turned ON. Initial sizing should be done per Table 1. See section 5.4 for adjusting the overload trip point as part of the commissioning process.

5.3 FUNCTIONAL TEST

⚠CAUTION	The Function Test should be carried out while the vessel is still at dock and before it is taken out to sea after installation has been completed.

After installation and filling perform the following function tests:

1. Power ON the autopilot (or electronic jog lever).
2. Activate the autopilot (or electronic jog lever) to command motion.
3. Verify that the rudder position changed.
4. Set the autopilot to the manual mode and operate the pump-set to determine if the Port and Starboard directions are correct.
5. If the rudder goes the opposite way than expected.
   a. Reverse the two electrical leads between the motor and the autopilot.

NOTICE	Most new autopilot systems will perform this test during their dockside set-up procedures.

6. Operate the pump-set and note the “hard-over” to “hard-over” (HO to HO) time.
7. Verify that it is in the range of 10 to 16 seconds. Times outside of this range indicate a mismatched pump-set for the steering system.
8. Confirm the unit develops the rated pressure during operation.

5.4 OVERLOAD ADJUSTMENT

Kobelt recommends using an adjustable style thermal overload to protect the HRP electrical motor. The hard over current on every HRP35 varies within a certain range. Furthermore, the HRP35 can draw different current depending on if it is pumping to port or starboard. Using an adjustable style thermal overload allows for fine tuning the trip points. This helps to ensure false trips are not experienced while keeping the motor fully protected from overheating.

The following steps are recommended to size and adjust the thermal overload on an HRP35:

⚠CAUTION	The overload adjustment should be carried out while the vessel is still at dock and before it is taken out to sea after installation has been completed.

1. Read all steps below in the adjustment procedure before starting.
2. Observe the recommended thermal overload setting given in section 2.1, Table 1, and set the thermal overload, OL1 in Figure 4, to this value.
3. Ensure all electrical devices have been sized and wired as given in section 4.3.
4. [Optional] If available, connect and monitor an ammeter on the motor power supply lead for this procedure.
5. Start the HRP running the steering cylinder until it has reached a ‘hard-over’ condition on the starboard side.
6. Immediately upon reaching ‘hard-over’, start a timer and leave the HRP running.
7. When the overload trips, record the trip time.
8. If the overload does not trip before the upper range of the recommended trip time given in section 2.1.5, turn the HRP off.
9. Refer to Figure 10 for interpreting and acting on test results. Ensure the motor cools down to the touch before running subsequent tests.
10. Once step 9 is completed on the starboard side, repeat steps 5-9 on the port side. The adjustment procedure must ensure that both sides trip within the recommended trip time in section 2.1.5. If necessary to have one side outside of the recommended trip range, it is recommended to ere on the lower side of the recommended trip times.

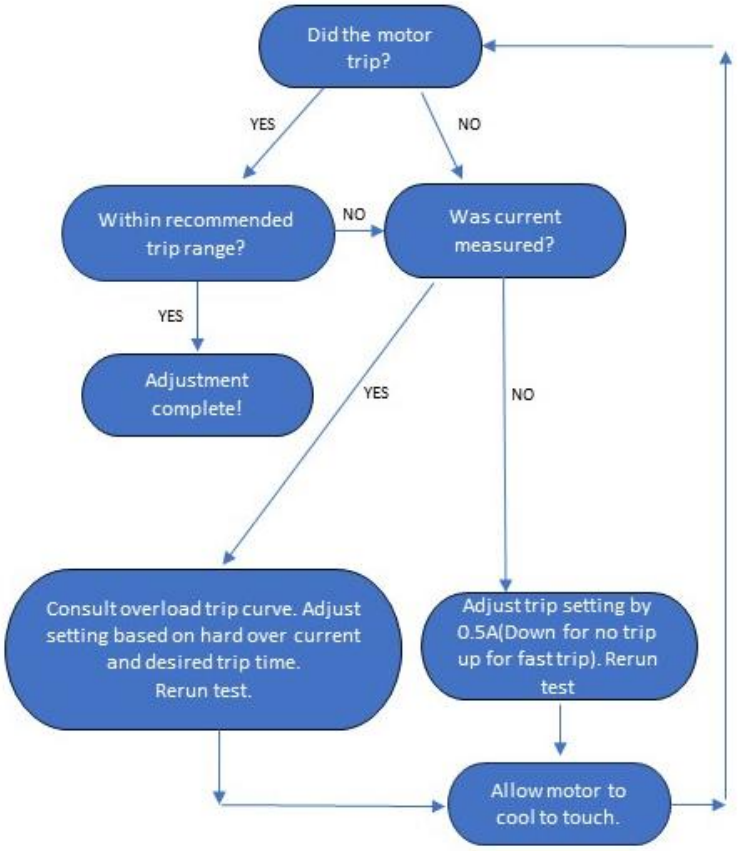

Figure 10: Overload adjustment evaluation.

6 MAINTENANCE

6.1 PREVENTATIVE MAINTENANCE

- Monthly (12 times per year)
  - Inspect connections for leaks.
- Quarterly (4 times per year)
  - Verify adequate oil level.
  - Inspect the motor brushes
  - Visually inspect wire and cable insulation for splits or damage.
- Every two years
  - Sample and analyze the oil in the steering lines.
  - Drain reservoir and clean out.
  - Verify pump develops rated pressure.
  - Verify insulation integrity of motor windings.

6.2 RECOMMENDED SPARE PARTS

As a minimum Kobelt recommends the following spare parts are on-hand:

Table 3: Recommended Spares

RECOMMENDED SPARES		
QTY	**ITEM**	**KOBELT PART #**
1	HRP35 REPAIR KIT (12 VDC/24 VDC)	600-101-RK

When purchasing spare parts refer to Appendix B: Pump Parts List at the back of this manual for Kobelt component Part Numbers. See instructions at the end of this manual for shaft seal and motor brush replacement.

NOTICE	It is recommended that any required service work on an Accu-Steer unit be performed by a factory authorized service representative. Please contact the nearest Kobelt authorized distributor for assistance.

7 TROUBLESHOOTING

If you encounter problems with the operation of your product, please refer to the trouble-shooting suggestions before contacting Kobelt for assistance. If the steps below do not resolve your issue, please reach out either Kobelt directly or our Dealers in your area.

Table 4: Common Solutions

Problem (Issue encountered)	Cause (What it means)	Corrective Action (What to do)
HRP does not turn ON	No power to unit.	1. Check that the breaker is ON and has not tripped. 2. Check that power is being output by the Autopilot. 3. Use a Multi-meter to confirm if power is present between the motor leads when the Autopilot is commanding motion.
Wheel feels soft	Air present in Hydraulic System	1. Bleed hydraulic system to remove trapped air. 2. Check for proper operation.
HRP turns in opposite direction then expected	Motor connection leads are backwards, *OR* the autopilot is expecting the reversed wiring configuration.	1. Shut off power to the unit. 2. Disconnect the Red and Black wire leads. 3. Swap the lead connections and re-connect. 4. Check for proper operating direction.
HRP is running but cylinder doesn't move	Flow adjustment is close.	1. Turn the knob slowly till ram starts to move. Increase speed by turning the knob up to 1/4 turn after this point.
Radio interference or noise observed on nearby communication or navigation equipment during HRP operation	EMI/RFI generated by the pump motor is affecting nearby electronic equipment.	1. Verify motor power cables are routed separately from communication and antenna cables. 2. Ensure equipment grounding and bonding are properly installed. 3. Install an EMI/RFI suppression capacitor across the motor power terminals as described in Table 2. 4. Verify capacitor is installed as close to the motor as practical.

8 WARRANTY

Kobelt Manufacturing Co. Ltd. ("Kobelt") warrants the Products and Parts manufactured by Kobelt to be free from defects in workmanship or material and that said products are designed mechanically and functionally to perform to specifications.

This warranty is effective providing:

- The equipment is used within the intended operating conditions and in accordance with Kobelt recommendations
- The equipment is installed according to equipment diagrams, specifications and recommendations which Kobelt has provided

This warranty becomes invalid if the factory supplied serial number has been removed or altered on the product. This warranty does not cover cosmetic damage or damage caused by an act of God, accident, misuse, abuse, negligence or modification of any part of the product. This warranty does not cover damage due to improper operation or maintenance, connection to inappropriate equipment or attempted repair by anyone other than an authorized Kobelt representative.

Upon identification of a potential issue or defect with a Kobelt Product or Part, the Warranty Applicant ("Applicant") must immediately contact Kobelt and describe the issue in writing, by letter, fax, email or other electronic conveyance. Kobelt will then assess the cause of the defect, and determine warranty applicability and appropriate remediation.

If any part is found to be defective, Kobelt will replace said part FOB the Kobelt factory provided that any such defective part is returned by the Buyer with freight and applicable forwarding charges prepaid by the Buyer. Kobelt's sole obligation to the Applicant will be to repair or replace the defective part with same or similar product, to a maximum value of the list price of the product or part. The Kobelt warranty does not cover labour charges, travel or any other associated expenses.

All Products and Parts manufactured by Kobelt, are subject to a warranty against manufacturer's defects in materials or workmanship for a period of two (2) years from the date of purchase.

Kobelt will be responsible for all Products or Parts sold by Kobelt but manufactured by 3rd party manufacturing companies. However, these products and parts are subject to applicable 3rd party warranties, and may not be the same as the Kobelt warranty.

9 APPENDIX A: INSTALLATION DIMENSIONS

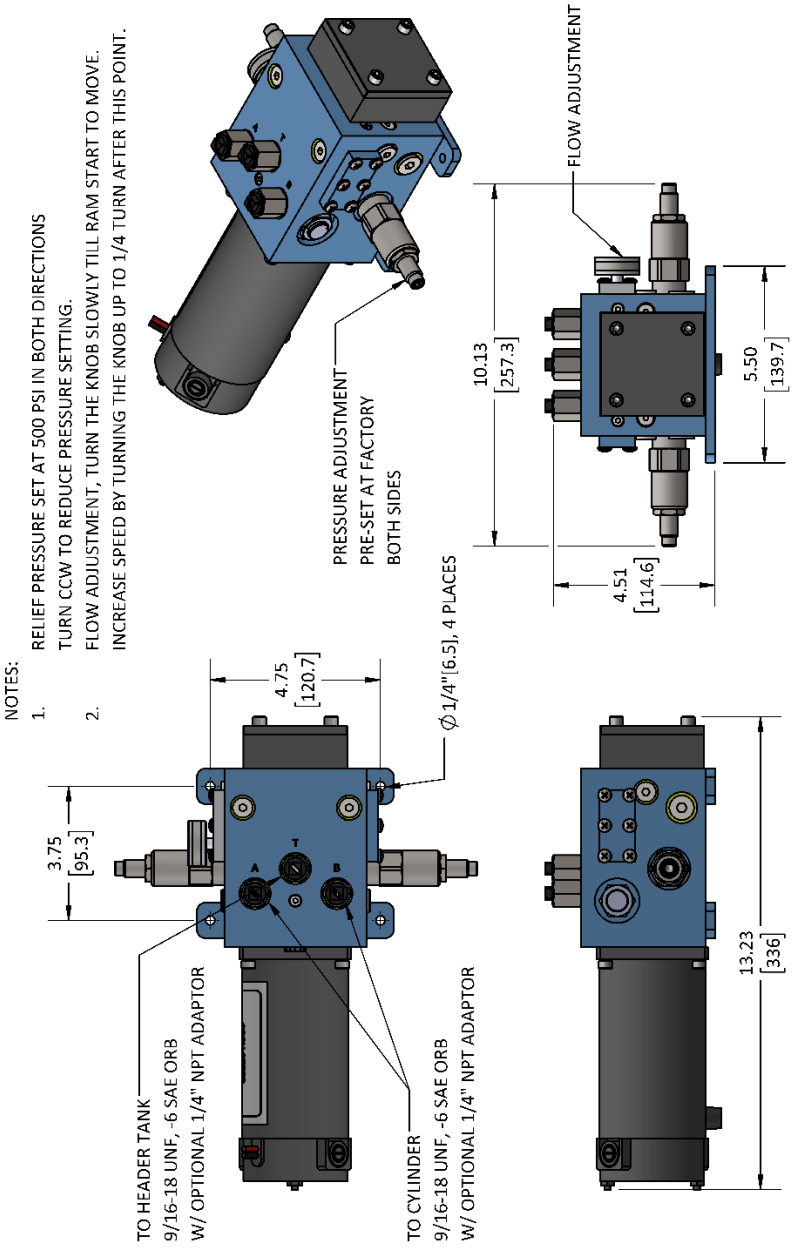

Figure 11: HRP35 Installation Dimensions

10 APPENDIX B: PUMP PARTS LIST

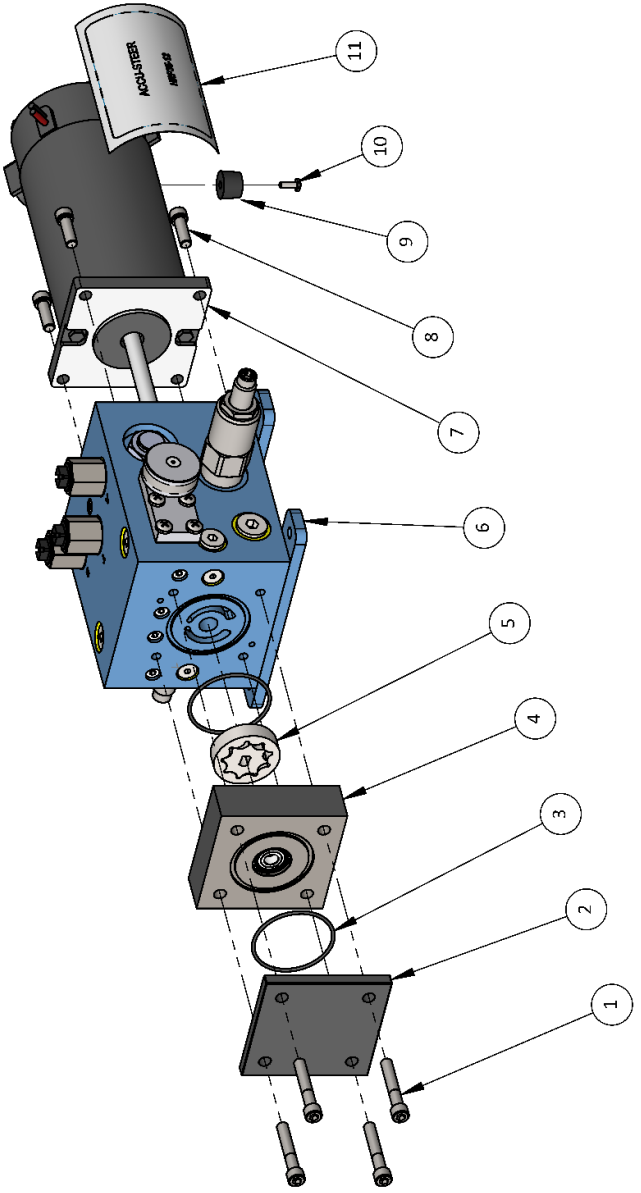

Figure 12: HRP35 Parts Diagram

Table 5: HRP35 Parts List

	Model No.:	HRP35-12	HRP35-24
	Part No.:	600-101	600-102
ITEM	**DESCRIPTION**		
1	SOCKET HEAD CAPSCREW	1002-1024	
2	PUMP END COVER PLATE	7001-0042	
3	O-RING	1101-0031	
4	END PLATE SUB ASSEMBLY	502-115	
5	GEROTOR	7250-0004	
6	MANIFOLD	502-100	
7	MOTOR	7070-0013	7070-0014
8	SOCKET HEAD CAPSCREW	1002-1012-2	
9	RUBBER FOOT	7056-0052	
10	MACHINE SCREW	1012-0606	
11	LABLE HRP35	701-011	701-012

11 APPENDIX C: MANIFOLD ASSEMBLY PARTS

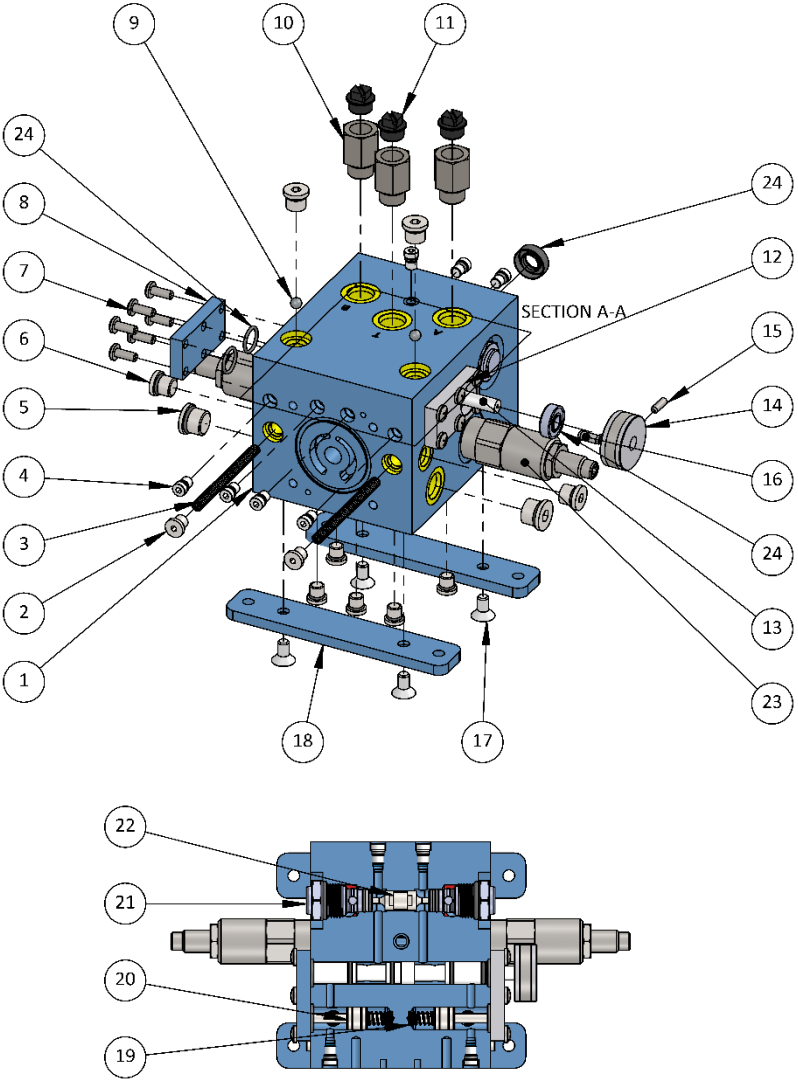

Figure 13: 502-100 Manifold Parts Diagram

Table 6: HRP35 502-100 Manifold Parts Table

		Part No.:	502-100
ITEM	**QTY**	**DESCRIPTION**	
1	1	HRP 35 MANIFOLD BODY	7001-0044
2	7	PLUG, HEX SCKT, 2 ORB, PLATED STEEL	7039-0660
3	2	SPRING HRP 35 BALL RETAINER	1201-0263
4	7	PLUG, HEX SKT #01 ZERO LEAK	7039-0668
5	2	PLUG, HEX SKT, -06 ORB, PLATED STEEL	7039-0662
6	4	PLUG, HEX SKT, -04 ORB, PLATED STEEL	7039-0661
7	12	3/16 X 1/2 ROLL PIN 18-8 SS	1024-0808
8	1	HRP 35 LEFT SIDE COVER PLATE	7001-0037
9	4	BALL CHECK	1301-0108
10	3	FITTING, -06 ORB M x 1/4 NPT	7039-0141
11	3	PLASTIC PLUG, 1/4 NPT	7039-3042
12	1	HRP 35 RIGHT SIDE COVER PLATE	7001-0038
13	1	HRP 100 FL. CONTROL SPOOL ASSY	220-323
14	1	FLOW CONTROL KNOB	7001-0045
15	1	#8 x 1/2" SET SCREW	1016-0908
16	1	SCREW, PAN HD, #10 UNC X 1/2, GR 18-8	1012-0808
17	4	FLAT HD SOCKET CS, 1/4-20 x 1/2, Gr 18-8	1015-1008
18	2	HRP 35 FOOT MOUNT BRACKET	7057-0014
19	2	SPRING DIFF. PR. VLV.	1201-0262
20	2	HRP 35 DIFF. PR. VLV.	7006-0003
21	2	CHECK VALVE	7049-0017
22	1	HRP LOCKVALVE SPOOL	7006-0002
23	2	RELIEF VALVE, DIRECT ACTING	7043-0018
24	1	HRP35 REPAIR KIT	600-101-RK

12 APPENDIX D: TYPICAL SYSTEM ARRANGEMENT

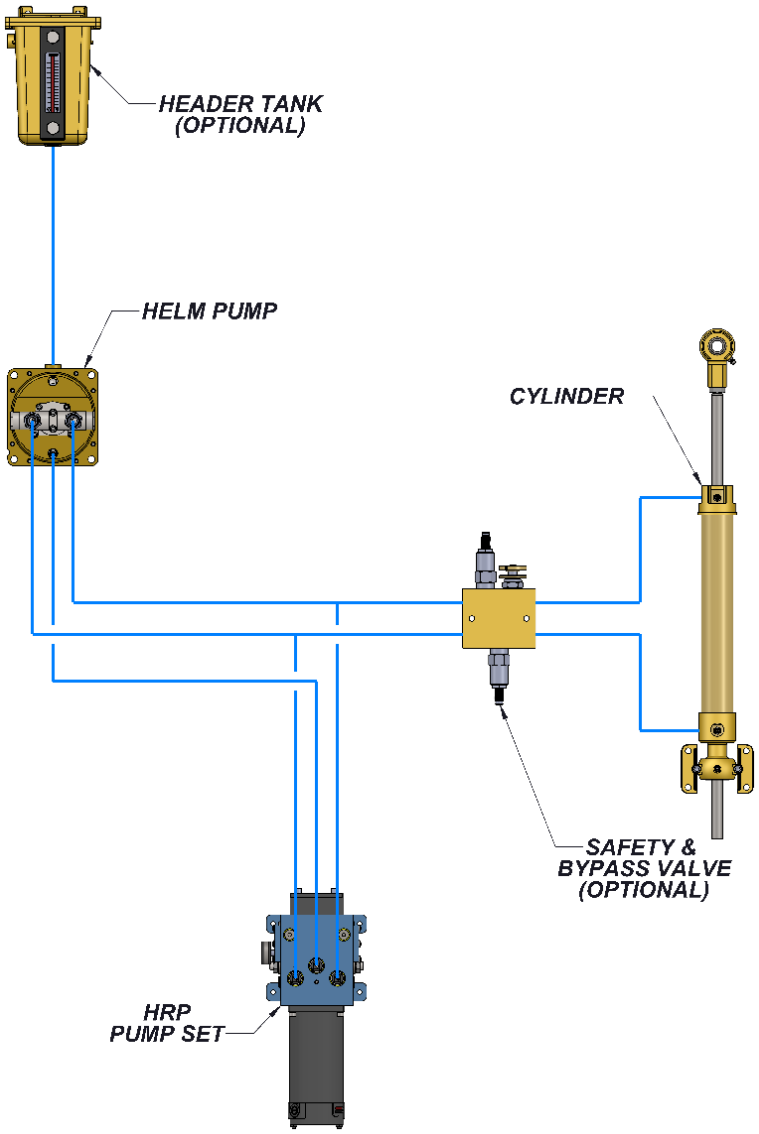

Figure 14: Typical System Arrangement

13 APPENDIX E: BRUSH REPLACEMENT

Steps for Replacement of Motor Brushes:

1. Remove the brush caps
2. Remove the brushes.
3. Inspect the brushes for wear.
4. If replacement required.
   a. Remove them with consideration to the direction of brushes.
   b. Install new brushes in proper orientation.
   c. Put the brush caps in right place.
5. If replacement not required.
   a. Re-assemble brushes and caps.

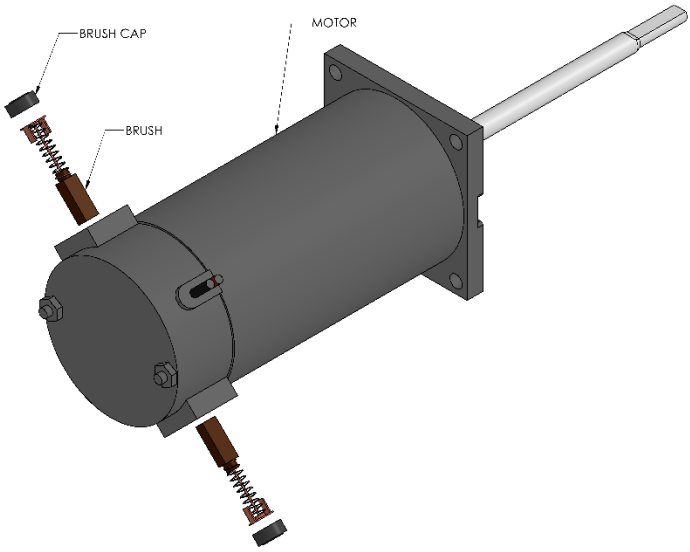

Figure 15: Motor Brush Diagram

14 APPENDIX F: SHAFT SEAL REPLACEMENT

Steps for Replacement of Motor Shaft Seal:

1. Clean both the Bore and Seal thoroughly with Methyl Hydrate or Similar Degreaser
2. Apply thin film of Loctite 567 (Liquid Teflon) to the Bore and Seal
3. Using moderate force, drive Seal into bottom of Bore using seating tool.

Note: Installation force is often provided solely by hand-operated arbor presses or soft-faced mallets (used in conjunction with strike plates).

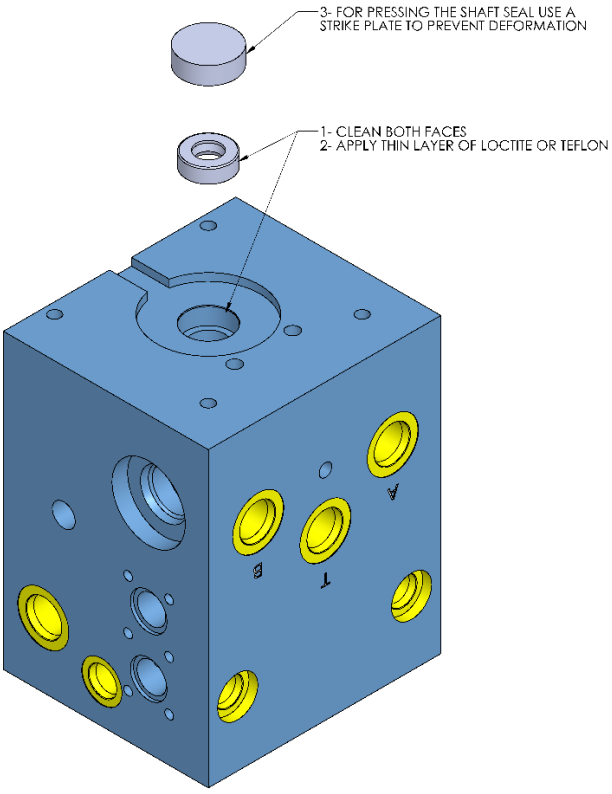

Figure 16: Motor Shaft Seal Diagram

15 REVISION HISTORY

Table 7: Table of revision changes

Document Revision	Release Date	ECN	Author	Revision Summary
B	-	-	-	Updated from legacy manual
C	2024-02-01	00971	GG	Section 2.1, Table 1, updated data. Changed recommended overload protection method. Added overload adjustment procedure.
D	2026-06-02	01392	SV	Update troubleshooting table P22, update installation dimension P24, Update BOM for manifold P28
E	2026-11-20	01560	MW	Section 4.3.3, EMC installation guidelines Revised table 4, Common solutions

Note:
for older version of this unit with built in relief valve refer to revision C of this manual.

Kobelt Manufacturing Co. Ltd.
8238 129th Street
Surrey, British Columbia,
Canada, V3W 0A6

Sales Tel: +1-604-572-3935
Fax: +1-604-590-8313
Email: sales@kobelt.com
Website: www.kobelt.com

Made in Canada / Printed in Canada