5107-SA /5108-SA SERIES
DISC BRAKE
SPRING APPLIED / AIR RELEASE

Owner's Operation, Installation & Maintenance Manual



Table of Contents

1 Introduction 4

1.1 Contact Information 4
1.2 Safety Information 4
1.2.1 Safety Alerts 4
1.2.2 Safety Instructions 4
1.2.3 Hazards 5
1.3 Product Description 6
1.3.1 Overview 6
1.4 Technical Data 8
1.5 Model Code Key 9

2 Installation 10

2.1 Preparation 10
2.1.1 General Preparation 10
2.1.2 Fixed Caliper Preparation 10
2.1.3 Floating Caliper Preparation 11
2.2 Brake Discs 11
2.3 Fixed Caliper Brakes 13
2.3.1 Caliper to Bracket 13
2.3.2 Caliper Brake + Pedestal Assemblies 15
2.4 Floating Caliper Brakes 16
2.4.1 Caliper to Bracket 16
2.4.2 Caliper Brake + Pedestal Assemblies 16
2.5 Piping 18
2.5.1 Valving 19

3 Commissioning 20

3.1 Caging/ Un-Caging 20
3.1.1 Uncaging Double Diaphragm Style Actuators 21
3.1.2 Caging Double Diaphragm Style Actuators 21
3.1.3 Uncaging Piston Style Actuators 22
3.1.4 Caging Piston Style Actuators 22
3.2 Air Gap 23
3.3 Function Test 23
3.4 Burnishing 24
3.5 Torque Test 25

4 Operation 25

4.1 Functional Requirements 25
4.1.1 Pressure Supply 25
4.1.2 Control 25
4.2 Service Limits 26

4.2.1 Disc Temperature 26
4.2.2 Ambient Temperature 26
4.2.3 Maximum Supply Pressure 26

5 Maintenance 27

5.1 Preventative Maintenance 27
5.2 Inspection 28
5.2.1 Pad Wear 28
5.2.2 Seals 28
5.2.3 Pin Wear 28
5.2.4 Floating pin inspection 28
5.2.5 Brake Disc 28
5.3 Service 29
5.3.1 Lubrication 29
5.3.2 Stroke Adjustment 29
5.3.3 Brake Linings 31
5.3.4 Removal of Caliper Half (Fixed calipers only) 32
5.3.5 Critical Fasteners 32
5.4 Recommended Spares 34

6 Revision History 36

7 Warranty 37

8 Appendix A: Installation Dimensions 38

9 Appendix B: Parts List Drawings 42

10 Appendix C: Actuator Service Procedure 45

1 INTRODUCTION

1.1 CONTACT INFORMATION

Kobelt Manufacturing Co LTD.
8238 129TH Street
Surrey, British Columbia
Canada, V3W 0A6

Sales Tel:	604-572-3935
Fax:	604-590-8313
Email:	sales@kobelt.com
Website:	www.kobelt.com

For further instructions, please contact our distributors or visit our website.

1.2 SAFETY INFORMATION

1.2.1 Safety Alerts

Throughout this manual, the following symbols, and their accompanying explanation, are used to alert the user to special instructions concerning a service or operation that may be hazardous if performed incorrectly or carelessly. The associated risk levels are stated below.

⚠ DANGER	This symbol indicates an imminently hazardous situation which, if not avoided, will result in death or serious injury.
⚠ WARNING	This symbol indicates a potentially hazardous situation which, if not avoided, could result in death or serious injury.
⚠ CAUTION	This symbol indicates a hazardous situation, which if not avoided, could result in minor or moderate injury.
NOTICE	This symbol informs the reader of events not related to personal injury but which there is a risk of damage to property or equipment.
SAFETY INSTRUCTIONS	This symbol informs the reader of safety-related instructions or procedures.

1.2.2 Safety Instructions

Notice to Installer:
Disregarding the following safety measures can result in an accident causing severe injury to personnel and damage to material assets:

- Only use the product as directed in this manual.
- Never put the product into service if there is evidence of visible damage.
- Never put the product into service before fully completing installation and commissioning.

- Do not carry out any modifications to the product.
- Only use authentic Kobelt spare parts.
- Observe all local regulations, directives and laws during the installation of this product.
- All installation, commissioning and maintenance work must only be conducted by qualified personnel. (For the purpose of this manual, qualified personnel are persons who are familiar with the assembly, installation, commissioning, and operation of the product and who have the qualifications necessary for their occupation.)
- Observe all specifications in this manual. If these guidelines are not followed and damage occurs, the warranty will be voided.

1.2.3 Hazards

⚠ DANGER	**Equipment Starts Automatically:** Brake systems frequently are controlled remotely and may activate suddenly causing bodily harm. Ensure all power sources are locked out prior to performing work.
⚠WARNING	**Brake Actuators Contain Compressed Springs:** The brake actuators contain springs that are under compression even when the brakes are not pressurized. The springs will release suddenly if disassembled incorrectly posing a risk of serious injury or death. Do not attempt to disassemble the actuators without clear work instructions and training.
⚠WARNING	**Pinch Points:** Brakes contain numerous pinch points which can cause serious injury. Ensure all power sources are locked out prior to performing work.
⚠WARNING	**High Pressure Fluids:** Kobelt lever brakes use high pressure hydraulics. Ensure all pressure is exhausted and the pressure source locked out prior to performing work.
⚠WARNING	**Hot Surfaces:** Disc brakes are capable of making the surfaces of the brake disc dangerously hot when burnishing or during braking events. Ensure the disc is adequately guarded to prevent inadvertent contact with the disc.
SAFETY INSTRUCTIONS	**Airborne Dust:** Brake linings contain fibers that may become airborne during cutting or sanding operations. Over exposure to these dusts should be considered hazardous. Use NIOSH approved respirators when working with brake linings. Request a MSDS for further information.

1.3 PRODUCT DESCRIPTION

1.3.1 Overview

This manual covers the installation, commissioning, operation and maintenance of the Kobelt 5107-SA and 5108-SA series spring applied / air release disc brake calipers. Read it in full, including the safety information in Section 1.2, before installing or servicing the brake.

Figure 1 shows a Kobelt 5107-SA series caliper brake with all the major components identified. The 5107-SA is equipped with a service and spring chamber combination actuator. The service chamber is actuated by air applied to the service port while the spring chamber is a spring applied / air release 'emergency' port. All of the Kobelt 5100 series caliper brakes can be fitted with either air applied, hydraulic applied, spring applied with air released or spring applied with hydraulic released actuators depending on the required service. Shown in Figure 1 is a 5107-SA fixed caliper. The 5107 caliper is available in a floating arrangement, contact the factory for further information. Figure 2 gives the overview of a floating caliper arrangement.

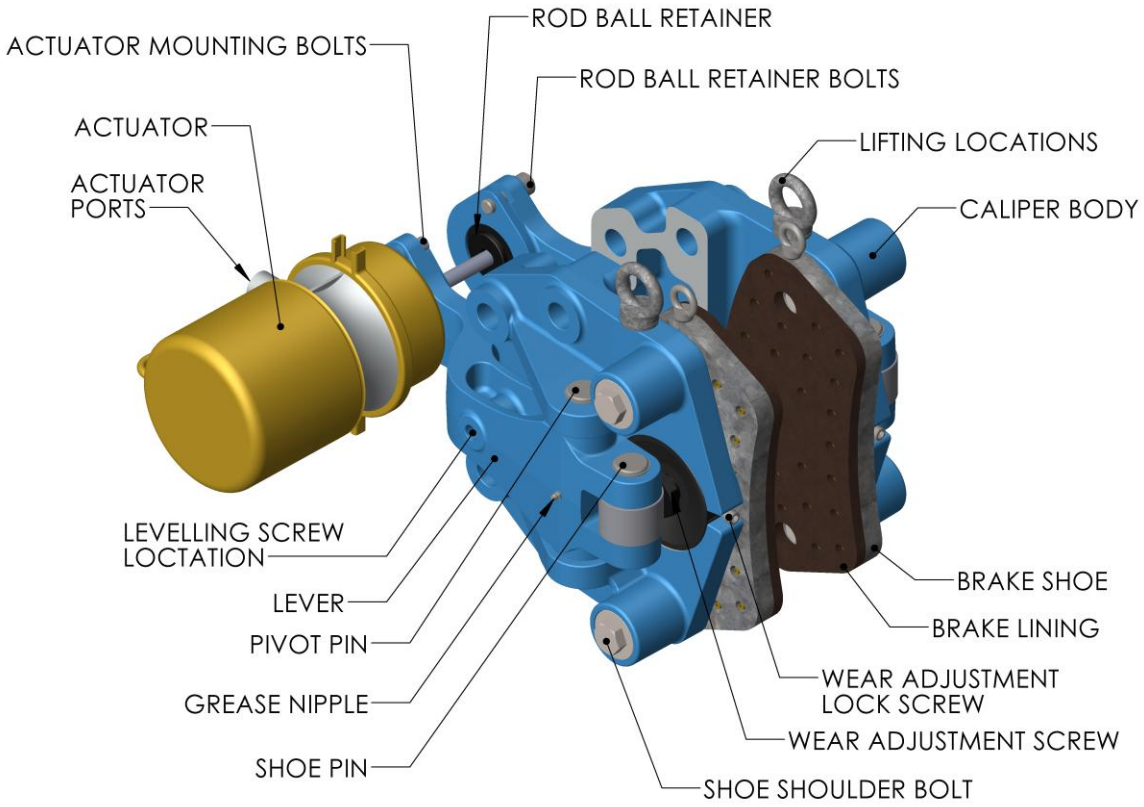

Figure 1: 5107-SA Fixed Caliper Overview

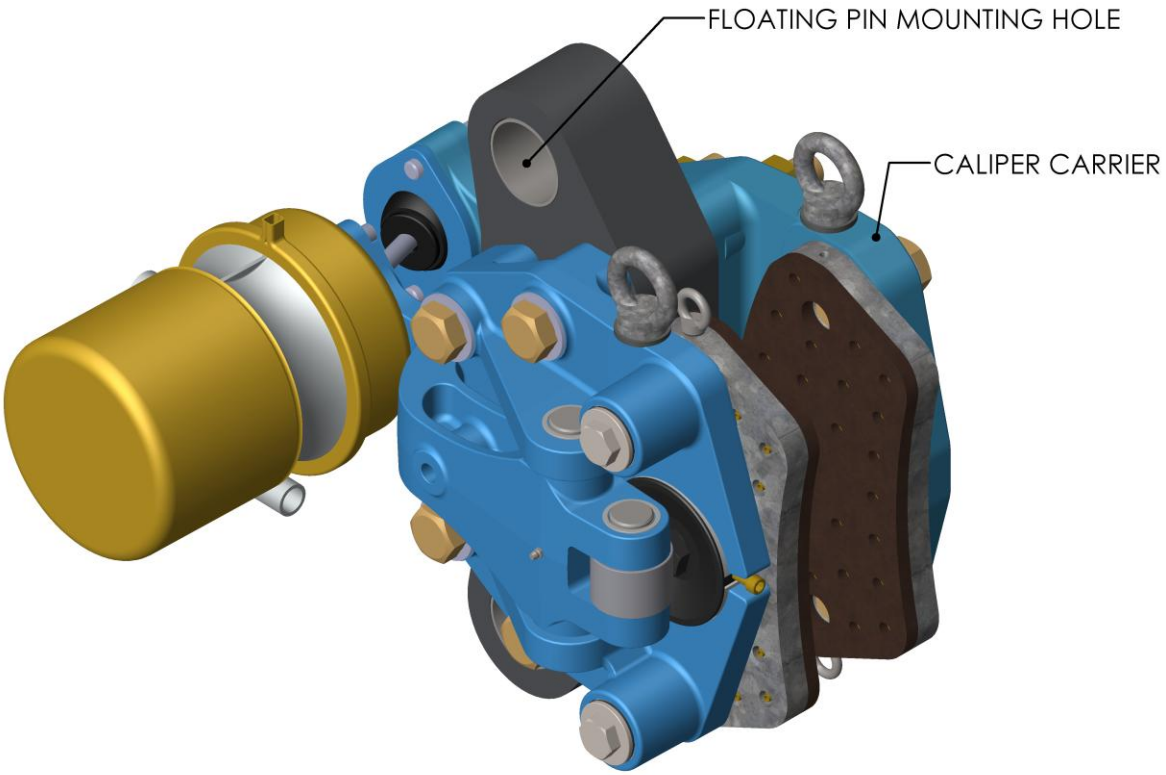

Figure 2: 5107-SAF Floating Caliper Overview

1.4 TECHNICAL DATA

In addition to the data below, refer to the relevant data sheets from www.kobelt.com or the technical drawings in Appendix A if provided.

Table 1: Brake Caliper General Specifications

Model	Shoe width	Pad thickness	Pad Life	Running clearance[1]	Min Disc Diameter	Min Disc Thickness	Temperature range	Weight
5107-SAXXXX-_ _	**7.00 in [178 mm]**	**0.5 in [12.7 mm]**	**8350 hp-hr [6230 kw-hr]**	**.04-.08in [1-2 mm]**	**30 in [762 mm]**	**1.0in [25.4 mm]**	-40°F …+131°F [40°C …+55°C]	303 lbs [137 kg]
5107-SAXXXX-_5		**0.625 in [16 mm]**	**11700 hp-hr [8730 kw-hr]**					
5108-SAXXXX-_ _	**7.87 in [200 mm]**	**0.5 in [12.7 mm]**	**9350 hp-hr [6975 kw-hr]**					308 lbs [140 kg]
5108-SAXXXX-_5		**0.625 in [12.7 mm]**	**13100 hp-hr [9770 kw-hr]**					

[1]*Per side*

Table 2: Brake Caliper Actuator Code Technical specifications

Model	Normal force		Hold Off Pressure	Release Pressure	Max Pressure		Max Volume		Port size
	Service[2]	Spring			Service	Spring	Service	Spring	
5107-SA1724P 5108-SA1724P	7250 lbs [32.28 kN]	9540 lbs [42.44 kN]	69 psi [4.8 bar]	78 psi [5.4 bar]	100 psi [6.9 bar]	145 psi [10 bar]	68.3 in^3 [1.1L]	98.5 in^3 [1.6L]	3/8 FNPT
5107-SA2424P 5108-SA2424P	9520 lbs [42.36 kN]	9540 lbs [42.44 kN]	69 psi [4.8 bar]	78 psi [5.4 bar]			82.0 in^3 [1.3L]	98.5 in^3 [1.6L]	
5107-SA2430P 5108-SA2430P	9510 lbs [42.33 kN]	12160 lbs [54.10 kN]	76 psi [5.2 bar]	80 psi [5.4 bar]			82.0 in^3 [1.3L]	128 in^3 [2.1L]	

[2]*At maximum stated service pressure*

1.5 Model Code Key

The 5108 caliper can be configured in several ways. Below is a key defining the letter code options

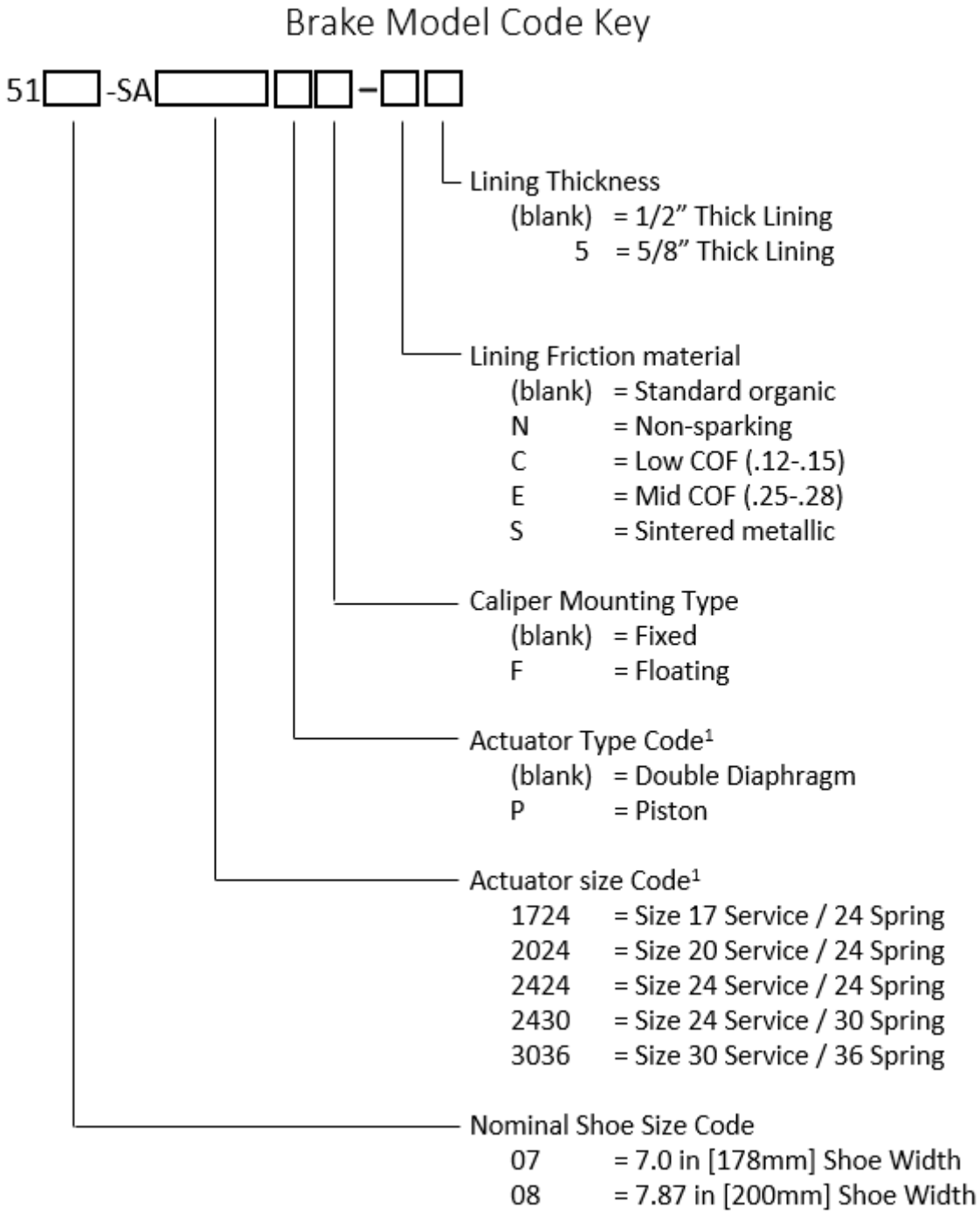

Figure 3: 5108-SA Model code key

[1]Not all actuator combinations may be available. Consult the factory or review model codes in Table 2 for validated actuator combinations.

2 INSTALLATION

2.1 PREPARATION

2.1.1 General Preparation

⚠ DANGER	5108-SA calipers are shipped with the caging bolt installed: 1. Use caution when handling the caliper and avoid potential pinch points should the spring actuator suddenly release. 2. The caging bolt must be removed before commissioning and using the brake. Failure to do so can result in a loss of brake torque. See section 3.1 for more information.

Actuator ports are plugged to prevent contamination of the seals. Remove the plugs prior to connection to the piping.

Brake discs are shipped with a light rust inhibitor applied to the surfaces. Remove the rust inhibitor using solvent and a cloth prior to installation.

Any guarding around the brakes must provide enough room to allow full extension of the brake actuators plus full pad wear adjustment.

2.1.2 Fixed Caliper Preparation

The mounting bracket to support the brake caliper must be designed to withstand the maximum braking forces generated by the brake caliper.

The mounting surface must be flat to ISO tolerance grade IT8 and parallel to the brake disc. Reference Figure 4 for the required form tolerances. See Appendix A for a complete set of dimensions.

Sufficient space should be allowed for routine inspection of the calipers and also for pad replacement.

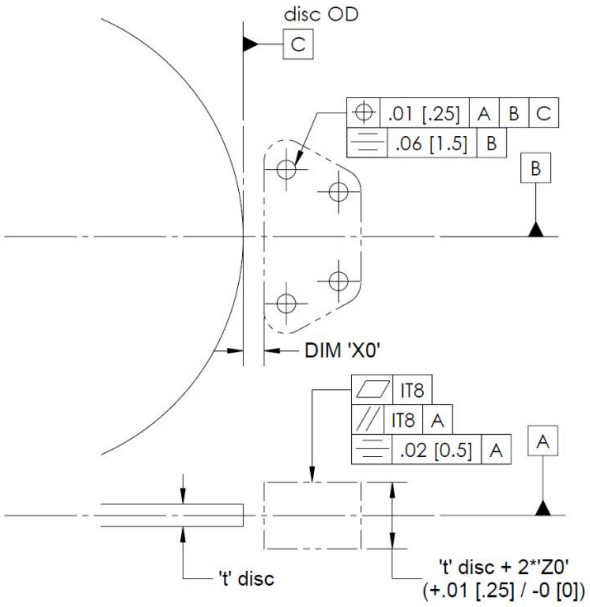

Figure 4: Brake bracket form requirements

Each caliper is secured by four bolts which should be tightened to the torque value specified in this manual. The bolted connection between the caliper and the brake bracket is designed as a friction connection.

The faying surfaces must be solvent cleaned in order to remove all visible oil, grease, soil, and other soluble contaminants from the surfaces. The faying surfaces must be prepared and coated to meet the requirements of an AISC Class A faying surface.

The caliper mounting bolt specifications are as follows:

a. Bolt Size: 1-1/8 x 7 UNC
b. Bolt Grade: SAE J429, Grade 8
c. Thread locker: Loctite 243
d. Tightening Torque: 550 ft-lbs [750 Nm]

2.1.3 Floating Caliper Preparation

The mounting bracket to support the brake caliper must be designed to withstand the maximum braking force generation by the brake caliper. The floating pin mounting holes on the bracket must be positioned accurately and square to the disc to ensure free movement of caliper along the pins through the life of brake pads.

The caliper mounting pin holes should have a position tolerance of at least ISO grade IT7. The floating pins should be sized to have an RC4 fit with the caliper floating pin bushings. Review the technical drawings in Appendix A for the required position of the floating pin with respect to the disc.

Lastly, the caliper bracket must provide a gap large enough for the caliper to slide along the floating pins during the life of the brake pads. The amount the caliper travels will be equal to the wear of one brake pad. Refer to Figure 7 section 2.4.2 for more information.

2.2 Brake Discs

The brake disc must be installed onto the rotating element before installing the caliper. Brake discs must meet the following requirements:

Table 3: Brake Disc Requirements

FEATURE	REQUIREMENT
AXIAL RUN OUT	IT9 (TIR)[1]
RADIAL RUN OUT	IT11 (TIR) [1]
FLATNESS	.005 in [.13 mm]
PILOT FIT	H9/f8
SURFACE FINISH	63 micro inches [1.6 micrometers] RMS
SURFACE HARDNESS	Light Duty[2] HB135 minimum
	Heavy Duty[3] HB235 minimum

[1] International tolerance class. Allowable run out is proportional disc O.D.

[2] Parking brakes and emergency brakes with stopping times of 10 seconds or less are considered light duty.

[3] Ventilated discs are exempted from this requirement.

To achieve the run-out tolerance the mounting face on the rotating element must be machined flat. Excessive run-out of the disc could cause premature wear of the linings, caliper pins, lever journals as well as the actuators.

The disc mounting bolts used must be of a suitable size and grade to safely resist the brake torque plus the stresses induced from thermal expansion of the disc. For high temperature disc applications, the holes for the mounting bolts must be machined oversized to allow the disc to expand during operation. Table 4 has recommended bolt hole radial clearances for various disc bolt circles and operating temperatures. Ensure that adequate washers are used to bridge the gap between the bolt and bolt hole.

Table 4: Mounting Bolt Radial Clearance

MOUNTING BOLT RADIAL CLEARANCE				
Disc Bolt Circle In [mm]	Maximum Disc Temperature, °F [°C]			
	400 [204]	500 [260]	600 [316]	700 [371]
10 [254]	0.011 [0.3]	0.014 [0.4]	0.017 [0.4]	0.021 [0.5]
15 [381]	0.016 [0.4]	0.021 [0.5]	0.026 [0.7]	0.031 [0.8]
20 [508]	0.022 [0.6]	0.028 [0.7]	0.035 [0.9]	0.041 [1.0]
25 [635]	0.027 [0.7]	0.035 [0.9]	0.043 [1.1]	0.051 [1.3]
30 [762]	0.032 [0.8]	0.042 [1.1]	0.052 [1.3]	0.062 [1.5]
35 [889]	0.038 [1.0]	0.049 [1.2]	0.061 [1.5]	0.072 [1.8]
40 [1016]	0.043 [1.1]	0.056 [1.4]	0.069 [1.8]	0.082 [2.1]

To reduce the size of the mounting bolt clearance hole it is recommended to offset the bolt circle on the brake disc inwards the required amount for radial clearance. The end result is the brake disc will have a slightly smaller bolt circle than the hub and the required radial clearance will be on the side where it is needed.

⚠WARNING	Do not use fitted bolts for installing brake discs. The bolt holes must be over sized to permit uninhibited expansion.

⚠WARNING	Do not secure a brake disc to a rotating element by welding.

⚠WARNING	Do not paint the cooling fins of a ventilated disc. The cooling efficiency will be compromised and overheating may result.

If the disc was damaged during installation with nicks or welding marks, remove the defects before putting into service.

For cases where a disc guard or some protective cover is required for a ventilated disc ensure that the guard does not compromise the performance.

An improperly designed cover or shield may cause air recirculation through the disc or radiant heat reflection, which could result in the disc overheating. The cooling air pumped through the disc must be exhausted away from the outer diameter of the disc to allow fresh, cool air to enter the inner vent opening of the disc.

2.3 Fixed Caliper Brakes

2.3.1 Caliper to Bracket

Once the brake bracket has been properly prepared as described in Section 2.1, take the following steps to install the brake caliper onto the mounting pedestal:

1. Unscrew and remove the rod ball retainer screw and pull the rod ball off of the lever. Note the orientation of the retainer and rod ball.
2. Slide the rod ball retainer onto the push rod of the actuator on the opposing caliper half, keeping the rod ball retainer orientation the same as shown in Figure 6 A.
3. Screw the rod ball and adjustment collar onto the actuator push rod as shown in Figure 6 A. Screw it down until it is close to the actuator as shown in Figure 6 B.
4. Ensure the caliper frame mounting pads and mounting bosses have been degreased and checked for flatness.
5. Place the caliper half with the actuator onto the frame as shown in Figure 6 A.
6. Place the second caliper half that receives the rod ball onto frame ensuring the actuator push rod is inserted through the lever eye on the opposing caliper half as shown in Figure 6 B.
7. Apply Loctite 243 to the threads and install the caliper mounting bolts hand tight. Ensure the mounting bolts meet the specification stated in 2.1.2.

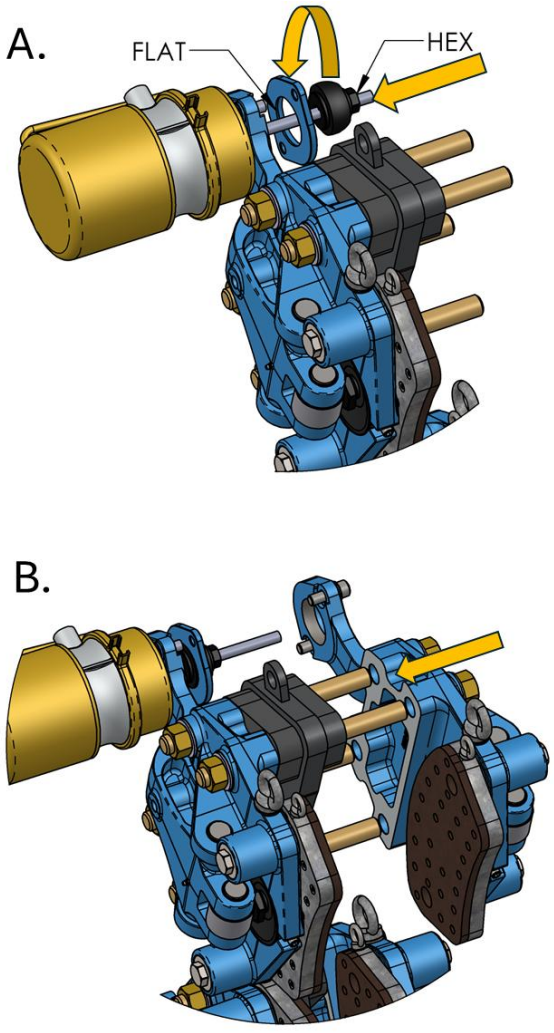

Figure 5: Caliper installation, mounting and setting rod ball

8. If the calipers are being installed onto the frame around a disc, ensure that brake pads are not contacting the disc. If they are, the wear adjustment screw will need to be retracted before proceeding with the next step.

9. Squeeze the levers together so they are bottomed out on the factory set levelling screws as shown in Figure 7 A.

10. With the levers squeezed together, advance the ball on the actuator push rod until it is seated in the ball socket on the mating lever as shown in Figure 7 A.

11. Apply Loctite 243 to the threads of the ball retainer screws. Snug up the ball retainer onto the ball ensuring even clamping pressure as shown in Figure 7 A.

12. Advance the ball adjustment collar out ¼ turn to ensure the levers are not bottomed out on the caliper body. Turning the collar in the direction shown in Figure 7 A will separate the levers away from the caliper body.

13. Verify the levers are not bottomed out on the caliper body by sliding the levers back and forth as shown in Figure 7 B.

14. Measure the height of the actuator with respect to the caliper body mounting surface and check against Dimension 'B' from Appendix A. Adjust the levelling screws and rod ball until Dimension 'B' is met and the levers are evenly positioned away from the frame centerline. See Figure 7 C for levelling screw adjustment.

15. Ensure after adjustments, the levers are still not bottomed to the caliper bodies as determined in step 13.

16. Torque the actuator ball retainer bolts to the value specified in Table 7.

17. Torque the actuator mounting bolts to the value specified in Table 7.

18. As shown in Figure 7 D, loosen the wear adjustment lock screw on the plunger. Retract the wear

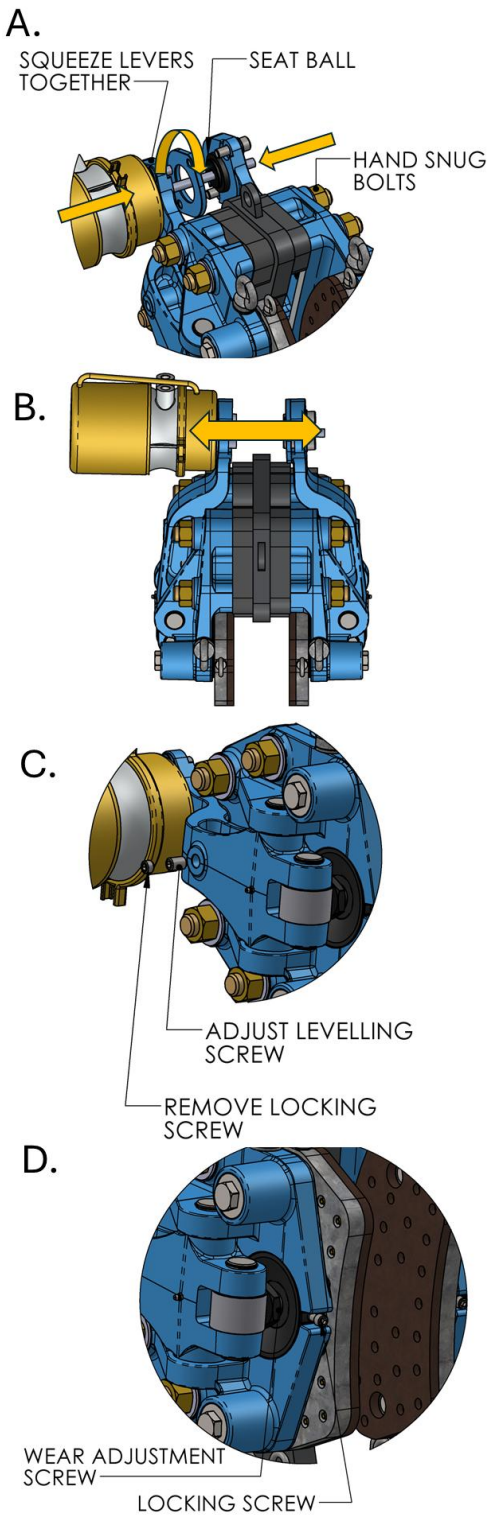

Figure 6: Caliper installation, setting posture for installing over disc.

adjustment screw so that the shoes are fully retracted. The shoes should be sitting flat against the caliper body at this position.

19. Measure the distance between the brake pads and ensure it is larger than the disc.

20. The caliper is now assembled onto the frame and ready to install the caliper-frame assembly over the disc.

2.3.2 Caliper Brake + Pedestal Assemblies

Perform the following steps to properly install a caliper brake with mounting bracket assembly:

1. Ensure that the brake caliper is properly installed onto the bracket per section 2.3.1.

2. Ensure that brake mounting pedestal mounting surfaces are degreases and prepared in accordance with an AISC Class A faying surface.

3. Lower the brake pedestal onto the mounting surface and center over the mounting holes.

4. Use feeler gauges to check the air gap between the disc and shoes. Adjust the wear adjustment screw evenly on both sides until the air gap meets the requirement stated in section 1.4. The total airgap must be within the total minimum airgap for both sides. For example, if the minimum air gap per side is 0.04”, the total gap from both sides should add to .08”.

5. Position the brake so that the outer radius of the brake shoe is in full contact with the Disc. Ensure proper radial clearance per Figure 4.

6. Uncage the brake actuator per Section 3.1. Apply the brake onto the disc by releasing the air pressure. The brake shoes will naturally align with the disc.

7. Probe under the pedestal base with feeler gauges to determine the shimming requirement.

8. Manually release the brake again and lift the brake up approximately two inches.

9. Insert the shims determined from step 7. Use ANSI shims that straddle the mounting bolts.

10. Insert the mounting bolts using appropriate flat washers. It is recommended to use a thread locking product such as Loctite® to ensure a vibration resistant and secure joint.

11. Lower the brake down and tighten the frame mounting bolts to the preload as specified by any local governing standards [(2)].
    (1) In absence of any local governing standards the brake pedestal mounting bolts must be installed in accordance to the provisions given in section 8.2 of the Research Council on Structural Connections (RCSC) *Specification for Structural Joints Using High Strength Bolts*

12. With the brake released, recheck the airgap between the disc and shoes. Adjust the levelling screws until the airgap is even on both sides. Ensure that the levers are not bound to the caliper body after making this adjustment.

13. Make a final adjustment to the wear adjustment screw so the minimum airgap is met on both sides.

14. Tighten the wear adjustment screw locking screw.

15. Reinstall and tighten the levelling screw locking screw.

16. The caliper installation is complete.

2.4 FLOATING CALIPER BRAKES

2.4.1 Caliper to Bracket

1. Mount the caliper to the support bracket floating pins. The bushings installed on the calipers are self-lubricating and do not require grease to be applied to the floating pins.

2. Install any retaining rings or bolts used to secure the floating pins.

3. Check that the caliper can slide over the full range of the floating pins smoothly and does not bind.

2.4.2 Caliper Brake + Pedestal Assemblies

1. Check to ensure the caliper has been correctly installed onto its supporting bracket per section 2.4.1.

2. Center the caliper with respect to the center of rotation of the disc.

3. Check the elevation of the caliper against the disc. Adjust the height of the bracket as needed to ensure that the full contact area of the shoe is within the circumference of the disc.

4. Uncage the brake actuator per section 3.1 and release the brake. The brake caliper will naturally align with the disc.

5. Probe under the base of the mounting bracket and measure the shims required so that the caliper will remain square to the disc when the bracket is bolted down. It is important to ensure that the bracket is not being bound to its mounting surface by the caliper.

6. Manually release the brake and raise the bracket assembly high enough to install the required shims as measured in step 5. Use ANSI shims that straddle the mounting bolts.

7. Lower the bracket assembly back down for final positioning.

8. Reapply the brake and ensure that the brake is still lined up to the disc per step 2 and 3

9. Position the mounting bracket so that the caliper mounting ears are at the correct position within the bracket. Both mounting ears should be checked. Refer to Figure 7 and the instructions below:

    - The caliper will travel from one side of the bracket to the other as the pads wear. The caliper will travel a total amount equal to the wear of one brake pad.

    - The initial gap, G_1, should be greater than the maximum running clearance given in section 1.4.

    - The gap on the opposing 'travel' side of the bracket should be equal to at least the initial gap, G_1, plus the total expected pad wear of one brake pad.

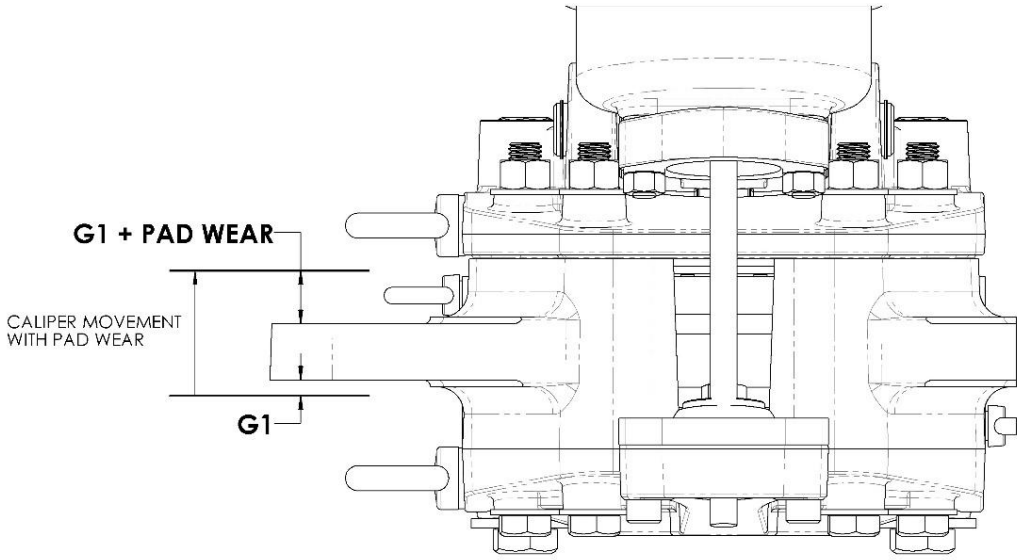

Figure 7: Caliper location in bracket

10. Insert the mounting bolts using appropriate flat washers. It is recommended to use a thread locking product such as Loctite® to ensure a vibration resistant and secure joint.
11. Tighten the mounting bolts to the preload as specified by any local governing standards[(1)].

    (1) In the absence of any local governing standards the brake pedestal mounting bolts must be installed in accordance to the provisions given in section 8.2 of the Research Council on Structural Connections (RCSC) Specification for Structural Joints Using High Strength Bolts.

2.5 PIPING

The piping to the brakes must be adequately sized to ensure rapid response times in all weather conditions. The piping must be selected to safely withstand the pressures required to operate the brakes. Secure the piping against vibration with pipe clamps per the schedule in Table 5.

Table 5: Pipe Clamp Table

PIPE CLAMP TABLE				
PIPE SCHEDULE	3/8”-½” tube [DN6]	¼” – 1/2” pipe ½”-3/4” tube [DN8-DN15]	¾” pipe 1”-1.25” tube [DN20]	1” pipe 1.50” tube [DN25]
CLAMP SPACING	3 ft [914 mm]	4 ft [1219 mm]	5 ft [1524 mm]	6.5 ft [1981 mm]

All piping must be cleaned prior to connecting to the actuators. Welded carbon steel piping must be pickled to remove the scale produced by welding.

The brake actuators are equipped with 3/8-18 NPTF ports. NPT port connections should be tightened 2-3 turns from finger tight (T.F.F.T.) or 12 ft-lbs [16.5 Nm]. The connections to the brake actuators must be made by hoses of suitable rating to accommodate the movement of the brake levers.

NOTICE	Do not over tighten the fitting in the actuator port as damage to the actuator may occur.

For operation in sub-zero temperatures down to a minimum of 0°F [-20°C], the air must be dried to a dew point of -50°F [-46°C].

⚠WARNING	Failure to adequately dry the compressed air supply may result in the brake valve freezing and rendering the brakes inoperable in sub-zero weather conditions.

2.5.1 Valving

For spring applied / air released caliper brakes it is recommended to install a quick exhaust valve at each actuator.

Combination brakes have the risk of applying both the service chamber and spring chamber output force at the same time and compounding the output force of the actuator. Under no-circumstances should the brake actuator be put into a compounded state. Failure to follow this can result in damage to brake components.

To ensure a compounded actuator state cannot happen it is recommended to make use of an anti-compounding valve to prevent the service chamber from pressurizing when the spring chamber is applied.

⚠WARNING	Do not pressurize the service chamber when the spring chamber is applied (depressurized). The compounded load will damage the brake components.

3 COMMISSIONING

3.1 CAGING/ UN-CAGING

All spring applied / air released actuators are supplied with a manual releasing bolt. The release bolt permits manual release of the brake in the event that fluid pressure is lost or not available.

Caging the actuator will release and hold the caliper in the released position regardless of the air pressure applied to the spring chamber. The caliper cannot generate any braking torque in this position. Uncaging the actuator will allow the spring chamber to operate as normal when air pressure is applied/exhausted from the spring chamber.

The caging procedure depends on whether the actuator is a double diaphragm or a piston style actuator. Refer to Figure 8 below to determine the type of actuator on your brake.

Refer to section 3.1.1 and section 3.1.2 for uncaging and caging a double diaphragm actuator.

Refer to section 3.1.3 and section 3.1.4 for uncaging and caging a piston style actuator.



Figure 8: Difference between Piston and Double Diaphragm Actuators

3.1.1 Uncaging Double Diaphragm Style Actuators

Brake actuators must be uncaged before putting the brake calipers into service. To uncage the actuator, follow the directions below:

1. [Optional] To aid in uncaging the actuator, apply the release pressure to the actuator's spring chamber.
2. Turn the nut at the base of the caging bolt counterclockwise until it has come loose from the actuator housing surface indicating it is no longer holding the brake in a released position.
3. Turn the caging bolt 90 degrees counterclockwise and pull it through the top of the actuator housing.

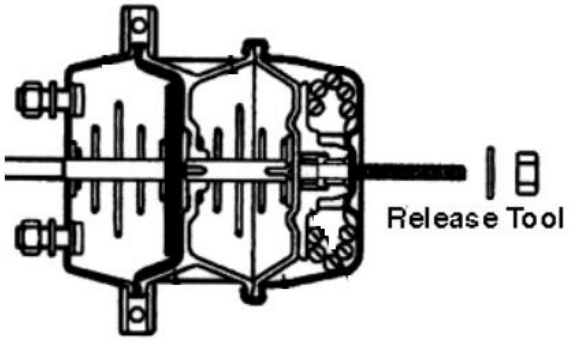

Figure 9: Double Diaphragm Caging Bolt

4. Place the caging bolt into the storage pocket on the side of the actuator housing, or keep separately in a safe, readily accessible location.
5. Install the rubber dust cap into the hole at the top of the actuator where the caging bolt was installed.
6. If air pressure was applied to the spring chamber during the uncaging process, it can now be exhausted to apply the brake.
7. The uncaging process is complete and the brake can be returned to service.

⚠ DANGER	The caging bolt must be fully removed prior to putting the brakes into service. Failure to do so may result in a complete loss of brake torque.

3.1.2 Caging Double Diaphragm Style Actuators

To manually cage(release) a double diaphragm brake:

1. [Optional] To aid in caging the actuator, apply the release pressure to the actuator's spring chamber.
2. Remove the dust cap from the caging bolt access hole in the top of actuator housing.
3. Remove the caging bolt from the side pocket of the actuator housing
4. Insert the caging bolt through the access hole in the top of the actuator housing and lock it into the internal pressure plate.
5. Turn the caging bolt 90˚ clockwise and pull on the bolt to seat it in the pressure plate properly.
6. Put on release washer and nut. Tighten nut until it is finger tight.

7. Turn the nut until the actuator is fully released. Do not apply more than 35 ft-lbs onto the caging bolt nut. **DO NOT** use an impact gun to tighten the caging bolt nut.
8. Before putting the brake back into service, ensure that the actuator is uncaged as described in section 3.1.1.

⚠ DANGER	The manual release bolt must be fully removed prior to putting the brakes into service. Failure to do so may result in a complete loss of brake torque.

3.1.3 Uncaging Piston Style Actuators

To manually uncage(apply) a piston style brake actuator:

1. [Optional] To aid in uncaging the brake, apply the release pressure to the spring chamber.
2. Use a ¾" wrench and turn the flanged bolt on the top of the actuator clockwise. **DO NOT** use an impact gun to uncage the actuator.
3. Continue to turn the bolt clockwise until it reaches the end of travel. Apply a maximum torque of 55 ft-lbs[75Nm] to the caging bolt.
4. Check that the caging bolt is fully uncaged. The flange of the caging bolt should be fully seated against the actuator housing. If it is not, the actuator may not be fully unaged and full braking torque may not develop.
5. The actuator is now uncaged, and the brake can be returned to service. If air pressure was applied to the spring chamber during the uncaging process, it can now be exhausted.

⚠ DANGER	The caging bolt must be fully locked in the uncaged position prior to putting the brakes into service. Failure to do so may result in a complete loss of brake torque.

3.1.4 Caging Piston Style Actuators

To manually cage(release) a piston style brake actuator:

1. [Optional] To aid in manually caging the actuator (releasing the brake), apply the release pressure to the spring chamber.
2. Use a ¾" wrench and turn the flanged bolt on the top of the actuator counter-clockwise. **DO NOT** use an impact gun to cage the actuator.
3. Continue to turn the bolt counter-clockwise until it reaches the end of travel. Apply a maximum torque of 74 ft-lbs[100 Nm] to the caging bolt.
4. If air pressure was applied to the spring chamber during the caging process, it can now be exhausted.

5. Verify the actuator is fully released by checking for an airgap between the brake shoe and the disc.
6. Ensure the actuator is uncaged before returning the brake to service. Follow section 3.1.3 for direction on uncaging a piston style actuator.

⚠ DANGER	The caging bolt must be fully locked in the release position prior to putting the brakes into service. Failure to do so may result in a complete loss of brake torque.

3.2 Air Gap

Prior to putting the brakes into service ensure that the airgap between the brake pads and disc when the brakes are released is adequate and set to the minimum value specified in section 1.4. Adjust if necessary per the instructions in section 5.3.2.

For floating calipers, the air gap may not appear even on both sides when the caliper is released. It is recommended to manually move the caliper in the bracket and check that the airgap can be made even on both sides. This will ensure that the caliper can adjust itself to accommodate disc runout.

3.3 Function Test

Before burnishing the brakes perform a quick inspection and function test of the brakes:

1. Ensure that all mounting bolts are properly installed and properly torqued.
2. Ensure proper running clearance (air gap) with the disc.
3. Ensure unobstructed movement of the brake levers for full actuator extension.
4. (Floating caliper only) Ensure free movement of the caliper along the floating pins
5. Ensure the brake disc surface is clean. Remove all contamination from the disc with cleaning solvent.
6. Ensure the pressure source complies with the specified pressure range and that it is properly interlocked with other machinery such as clutches, electric motors, etc.
7. Check that all bolts are tight.
8. Cycle the brakes and ensure that the brakes are operational

⚠ WARNING	Do not pressurize the service chamber when the spring chamber is applied (depressurized). The compounded load will damage the brake components.

3.4 BURNISHING

Burnishing is required in order to achieve rated brake torque. The process of burnishing removes minor contaminants from the rubbing surfaces and improves the degree of contact between the brake pad and disc.

Before burnishing, the brake disc must be checked to ensure it is free from contamination and oil. Use a solvent and cloth to remove any oil residue. Slight surface rust will be removed during the burnishing process, but heavy rust should be removed prior to burnishing.

If present, safety interlocks of the drive mechanism should be temporarily defeated to allow the disc to be driven with the brake partially applied.

The temperature of the disc surface must be monitored during the burnishing process and kept between 250°F [120°C] and 500°F [260°C]. If the upper temperature is reached, pause the burnishing process until the disc is cooled to the lower limit.

Extreme care must be taken not to overheat the disc during the process. On water cooled discs it may be necessary to limit the flow of cooling water in order to achieve the necessary disc temperature for effective burnishing.

⚠WARNING	Disc temperature must not exceed 700°F (371°C) or permanent degradation of the lining may occur.

Burnishing is best achieved by applying the maximum torque and minimum speed that the drive can tolerate. Depending on the configuration of the brake system it may be necessary to reduce the burnishing torque by;

a) Partially releasing the brake with fluid pressure to a level that the drive can tolerate, or

b) In systems with more than one brake, isolate all but one brake and burnish one brake at a time.

Three important points to consider when burnishing are;

i. The temperature of the disc must be closely monitored. Excessive heat will damage the friction linings.
ii. The duration of burnishing varies with each application.
iii. Burnishing is not complete until the brake is producing rated torque. This will be indicated by the motor current while burnishing.

⚠WARNING	Failure to properly burnish will not allow brake to produce full rated torque.

3.5 TORQUE TEST

Before putting equipment into service, confirm that full rated braking torque has been achieved through load testing or a torque test against the drive motors. If full brake torque has not been achieved, continue burnishing.

4 OPERATION

4.1 FUNCTIONAL REQUIREMENTS

4.1.1 Pressure Supply

It is necessary to size air compressors and storage tanks to provide sufficient air for the intended duty of the brakes. Actuators and control valves equipped with "U" cups and "O" rings require lubrication in order to provide long service life. Unlubricated seals will have excessive friction and wear. The oil that is required for the lubricator should be a hydraulic type with a viscosity grade of 10 to 32 centistokes. Heavy oils do not work well for lubricators.

The main supply line to the brake system should be equipped with a filter, and regulator. The filter's function is to remove moisture and dirt in the system and the regulator will provide a constant air pressure to the control system. If the brake system is operating in sub-zero temperatures, it is recommended to have an air dryer in the system to remove all moisture. Alternatively, a lubricator can be filled with methyl hydrate (wood alcohol) to prevent freezing of the air system.

⚠WARNING	Do not pressurize the service chamber when the spring chamber is applied (depressurized). The compounded load will damage the brake components.

4.1.2 Control

Emergency brakes must be controlled by a system adhering to a "fail safe" methodology. Relays, contacts and valves must be "normally open". The use of detented, manual or spool valves is strongly discouraged as these devices can either be inadvertently closed or fail closed.

4.2 SERVICE LIMITS

4.2.1 Disc Temperature

The Kobelt brake lining achieves maximum friction at 300°F. Over 300°F the brake begins to fade or experience diminishing friction. The maximum operating temperature of the brake linings is 700 ^{0}F [371^{0} C]. Temperatures in excess of this limit will permanently damage the linings and require replacement.

4.2.2 Ambient Temperature

In sub-zero temperatures, ventilated discs must be warmed up gently to avoid causing excessive thermal stresses in the disc. Failure to do so could cause the disc to crack. Once the temperature of the disc is out of freezing condition it can be used as normally intended.

Operating temperature of standard brake actuators is -40°C [-40°F] to 120°C [248°F]

4.2.3 Maximum Supply Pressure

Do not allow the supply pressures to exceed the values specified in section 1.4. If the available supply pressure exceeds the maximum allowable working pressure, then some form of a pressure regulator is required. The pressure supply system must be equipped with a safety relief valve.

5 MAINTENANCE

5.1 PREVENTATIVE MAINTENANCE

Maintenance Schedule

Maintenance Item	Daily	Monthly	Annually	5 years
Torque Test	✓			
Inspect for leaks	✓			
Measure air gap		✓		
Determine pad life		✓		
Lubricate pivot pins			✓	
Inspect & lubricate rod end			✓	
Lubricate plunger			✓	
Lubricate shoe pins			✓	
Inspect floating pin and bushings			✓	
Inspect Brake pins				✓
Service Actuators				✓

5.2 INSPECTION

5.2.1 Pad Wear

The running clearance (air gap) between lining and disc must be maintained within the specified limits. Failure to do so will result in the brake not producing its rated torque. When the running clearance has reached maximum specified air gap in section 1.4, the brake must be adjusted back to the minimum air gap. Inspect the airgap by inserting feeler gauges in-between the disc surface and the brake shoe. Refer to Section 5.3.2 for adjustment of the air gap.

The airgap should be inspected at both ends of the brake pad to ensure the pad is wearing evenly across its surface. If the brake pads are not wearing evenly, alignment of the caliper should be rechecked per section 2.

The maximum allowable pad life has been reached when the brake pad has worn down to 3/16" [4.8 mm] thick. The lining must be replaced before the rivets start making contact with the brake disc.

5.2.2 Seals

The actuator seals should be inspected on a periodic basis. To check the seals apply air pressure to the actuators and listen for any hissing sound that would indicate a torn or ruptured seal. Only the service chamber can be repaired. If the emergency chamber is leaking, the actuator must be replaced. Refer to Appendix C: Actuator Service for the service seal replacement procedure.

5.2.3 Pin Wear

The pivot pins must be removed for inspection once every five years. If there is any evidence of heavy scoring more than .01" [.25 mm] deep or if any area of the pin has been worn down by more than .01" [.25 mm] then replace the pins.

5.2.4 Floating pin inspection

For floating calipers, the floating pin and bushings should be inspected for abnormal wear patterns or from long term usage. If heavy scoring or divots have formed on the pin or bushing they should be replaced. Excessive wearing of the pin may be an indication that caliper is not aligned correctly to the disc. Review section 2 to check that the caliper is aligned correctly to the disc.

5.2.5 Brake Disc

The brake disc must be inspected periodically to monitor the condition of the braking surface. When the condition of the braking surface has deteriorated to the point that the quality requirements in section 2.2 are no longer met the disc must be removed and resurfaced or replaced. Table 6 gives the maximum material removal from the nominal disc thickness. Taking more material than specified in Table 6 can result in damage to caliper components and a loss in brake torque.

Table 6: Brake Disc Maximum Surface Material Removal

Maximum material removal from nominal disc thickness[1]	
Fixed caliper	**Floating caliper**
0.08 in[2mm]/side	.04 in [1mm]/side

[1]Maximum material removal is stated with respect to caliper only. Separate consideration must be given to the maximum material removal for the disc itself. Consult disc manufacturer for more information.

NOTICE	When re-machining the disc surface, equal amounts must be taken off of each face.

5.3 SERVICE

5.3.1 Lubrication

All Kobelt calipers during assembly are pre-greased on the shoe pins and saddle pins with a Lithium based NLGI 2 red bearing grease. These pins must be re-greased no less than once annually.

5.3.2 Stroke Adjustment

On spring applied calipers, the running clearance between the shoe and disc must be maintained within the limits given in section 1.4 as the linings wear. When the clearance reaches the maximum specified value, reset it to the minimum value using the procedure below.

⚠WARNING	Failure to maintain the running clearance within the specified limits will not allow the brake to produce adequate torque for the intended duty.

Air Gap Adjustment Procedure:

1. Apply release pressure to the spring chamber or manually release the brake. Manual release instructions are given in section 3.1.

⚠ DANGER	A sudden pressure loss or caging bolt failure could cause the spring applied chamber to apply the brakes without warning. Avoid pinch points.
⚠ WARNING	Ensure that the valve isolating the brakes is locked out and the pressure securely retained in the brake actuator prior to performing work.

2. Refer to Figure 10, back-off the wear adjustment locking screw using a 5/16” [8mm] Allen key.
3. Use a 1-7/8” wrench to turn the wear adjustment screw counterclockwise until the minimum air gap is achieved (1/4 turn CCW closes the airgap .02 inches [0.5 mm]).
4. Tighten the wear adjustment set screw.

Note that when the brake linings are replaced it will be necessary to reset the wear adjustment screw by turning inward to allow for the extra thickness of a new lining.

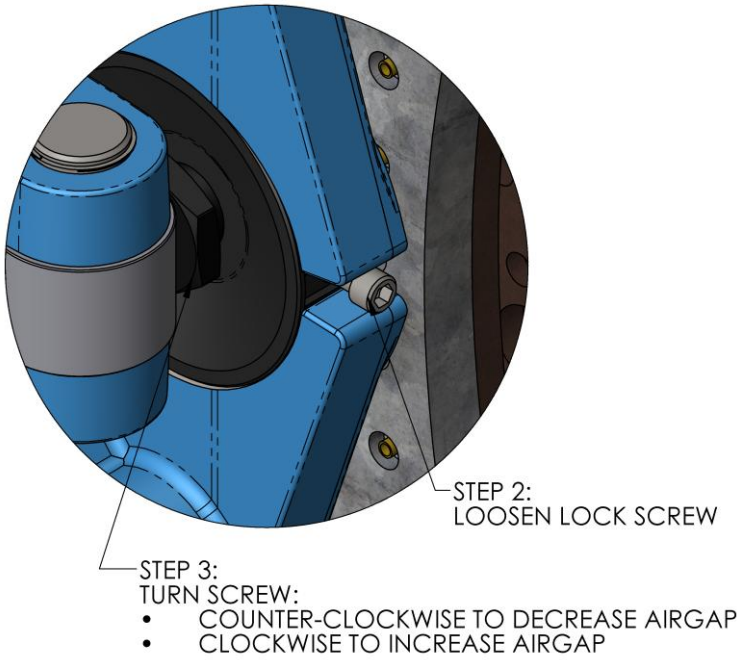

Figure 10: Airgap Adjustment

5.3.3 Brake Linings

The brake linings must be replaced before the rivets make contact with the disc. Before removing brake pads, secure the disc against rotation. In order to remove the brake shoe, air pressure must be applied to the spring chamber of the actuator to release the brake. As a safety measure, use the release tool to hold the brake in the retracted position per Section 3.1. The brake shoes can be removed with the following steps:

1. Apply release pressure to the emergency brake chamber or manually release the brake using the caging bolt as given in section 3.1.
2. Back-off the wear adjustment lock screw using a 5/16” [8mm] Allen key.
3. Us a 1-7/8” wrench to turn the wear adjustment screw fully inward.
4. Support the weight of the shoe assembly using the lifting eye.
5. Remove the shoe shoulder bolts with a 1-1/4” wrench.
6. (Floating caliper only) Remove the shoe bolts using a 1-11/16” wrench
7. Retract the plunger to disengage the reaction pin from the socket in the back of the shoe.
8. Lift the shoe away from the caliper assembly.

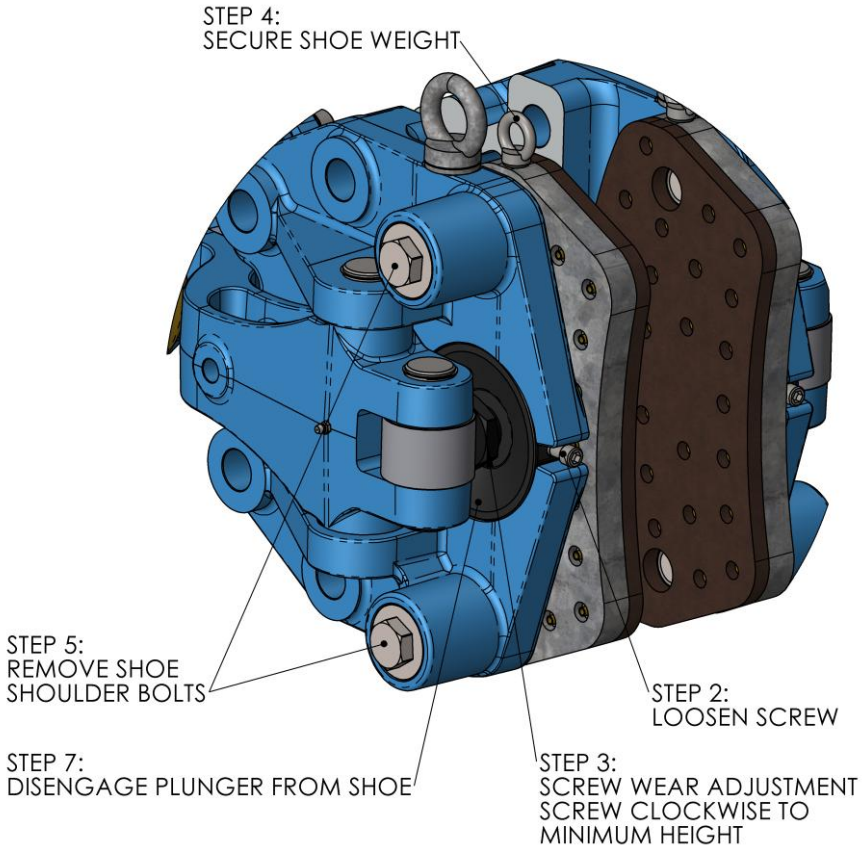

Figure 11: Floating caliper shoe removal procedure

To replace the linings, drill out the rivets and install the new lining with the proper rivets. Alternatively, replacement shoes with new linings already installed can be ordered from the factory.

Before replacing the shoe assembly, inspect the shoe plunger wear ring and replace if required. The shoe plunger guide surface should be cleaned and regreased with a light silicon based assembly grease.

To re-assemble the shoe assembly, follow the removal steps in reverse order and set the air gap as described in Section 5.3.2. Refer to Table 7 for the required preload of the caliper shoe pins and shoe bolts. It is recommended to apply a thread locking compound such as Loctite 243 to prevent loss of the shoe fastener preloads.

5.3.4 Removal of Caliper Half (Fixed calipers only)

1. Cage the actuator using the procedure described in Section 3.1
2. If the brake pads are to be re-used, set them aside in a clean and dry environment; otherwise ensure that spares are available.
3. Remove the actuator from caliper assembly.
4. Support the weight of the calipers to be removed.
5. Unscrew and remove the four mounting bolts or tie rods.
6. Carefully slide the caliper half from the bolts or tie rods.
7. Replacement of the caliper half is the reverse of the removal. Follow the procedure in 2.3 to properly install caliper halves back onto the mounting frame. Ensure that mounting bolts are torqued to the value specified in this manual.

5.3.5 Critical Fasteners

Table 7 lists all of the critical fasteners for caliper. Ensure that they are tightened to recommended values below when servicing your brake and the appropriate thread compound is used. For reference, location of all critical fasteners are shown in Figure 12.

Table 7: Critical Fastener Torque Table

	Critical Fastener Torques	
Fastener	**Fastener Thread Compound**	**Torque Value**
Caliper mounting bolts:	Loctite 243	550 ft-lbs [750 Nm]
Shoe Shoulder Bolt:	Loctite Anti-seize LB771	390 ft-lbs [474 Nm]
Shoe bolts (Floating caliper only):	Loctite 243	450 ft-lbs [610 Nm]
Actuator mounting nuts:	Loctite 243	144 ft-lbs [195 Nm]
Rod ball retainer screws:	Loctite 243	31 ft-lbs [42Nm]

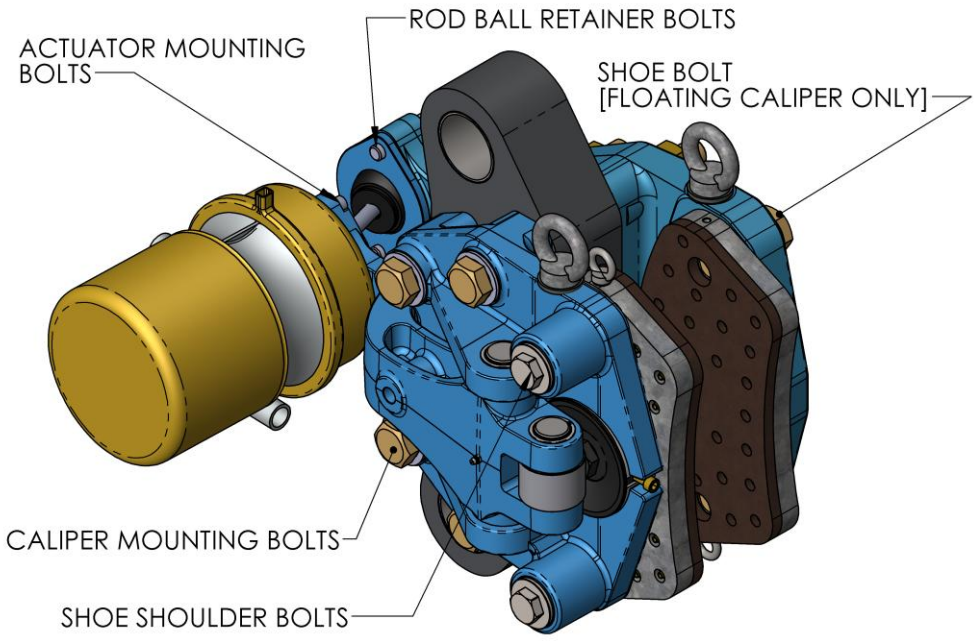

Figure 12: Critical fastener locations

5.4 RECOMMENDED SPARES

The quantity and type of spare parts that should be carried in stock depends on the criticality of the equipment, the hours of operation per day and severity of the service. The user will need to exercise some judgement based on experience as to what spares should be kept on hand. As a guideline Kobelt recommends the following spare parts program (see parts lists for specific part numbers):

A) <u>All Service Conditions</u>
   1. Lined shoes

B) <u>Continuous or Critical Operation</u>
   Items from A plus below:
   1. Actuator assembly
   2. Shoe pins
   3. Brake pads with set of rivets

Refer to Table 8 - Table 10 for part numbers and quantities of spare parts correlating to particular brake caliper models. Quantities are for 1 complete caliper.

Table 8: Caliper Spare Shoe Part Numbers

Caliper Model No.	Brake Shoe Part No.	Shoe Lining Thickness	Qty
5107-SAXXXX-_ _	5107-LS	1/2" [12.7 mm]	2
5107-SAXXXX-_ 5	5107-LS5	5/8" [16 mm]	2
5108-SAXXXX-_ _	5108-LS	1/2" [12.7 mm]	2
5105-SAXXXX- _ 5	5108-LS5	5/8" [16 mm]	2

Table 9: Spare Actuator Part Numbers

Caliper Model No.	Actuator Part No.	Qty
5107-SA1724P-XX	6217-24-P	1
5108-SA1724P-XX		
5107-SA2424P-XX	6224-24-P	1
5108-SA2424P-XX		
5107-SA2430P-XX	6224-30-P	1
5108-SA2430P-XX		

Table 10: Recommended Spare Parts, Miscellaneous Hardware

Part No.	Description	Recommended Spares	
		Fixed Caliper	Floating Caliper
5108-5000	Shoe Shoulder Bolt	4	2

6 REVISION HISTORY

Document Revision	Release Date	ECN	Author	Revision Summary
A	2026-11-20	-	GG	• Initial release

7 WARRANTY

Kobelt Manufacturing Co. Ltd. ("Kobelt") warrants the Products and Parts manufactured by Kobelt to be free from defects in workmanship or material and that said products are designed mechanically and functionally to perform to specifications.

This warranty is effective providing:

- The equipment is used within the intended operating conditions and in accordance with Kobelt recommendations
- The equipment is installed according to equipment diagrams, specifications and recommendations which Kobelt has provided

This warranty becomes invalid if the factory supplied serial number has been removed or altered on the product. This warranty does not cover cosmetic damage or damage caused by an act of God, accident, misuse, abuse, negligence or modification of any part of the product. This warranty does not cover damage due to improper operation or maintenance, connection to inappropriate equipment or attempted repair by anyone other than an authorized Kobelt representative.

Upon identification of a potential issue or defect with a Kobelt Product or Part, the Warranty Applicant ("Applicant") must immediately contact Kobelt and describe the issue in writing, by letter, fax, email or other electronic conveyance. Kobelt will then assess the cause of the defect, and determine warranty applicability and appropriate remediation.

If any part is found to be defective, Kobelt will replace said part FOB the Kobelt factory provided that any such defective part is returned by the Buyer with freight and applicable forwarding charges prepaid by the Buyer. Kobelt's sole obligation to the Applicant will be to repair or replace the defective part with same or similar product, to a maximum value of the list price of the product or part. The Kobelt warranty does not cover labour charges, travel or any other associated expenses.

All Products and Parts manufactured by Kobelt, with the exception of brake discs and pads, are subject to a warranty against manufacturer's defects in materials or workmanship for a period of two (2) years from the date of purchase. Brake discs are subject to a one (1) year warranty period, and brake pads and linings are not covered by warranty.

Kobelt will be responsible for all Products or Parts sold by Kobelt but manufactured by 3rd party manufacturing companies. However, these products and parts are subject to applicable 3rd party warranties, and may not be the same as the Kobelt warranty.

8 APPENDIX A: INSTALLATION DIMENSIONS

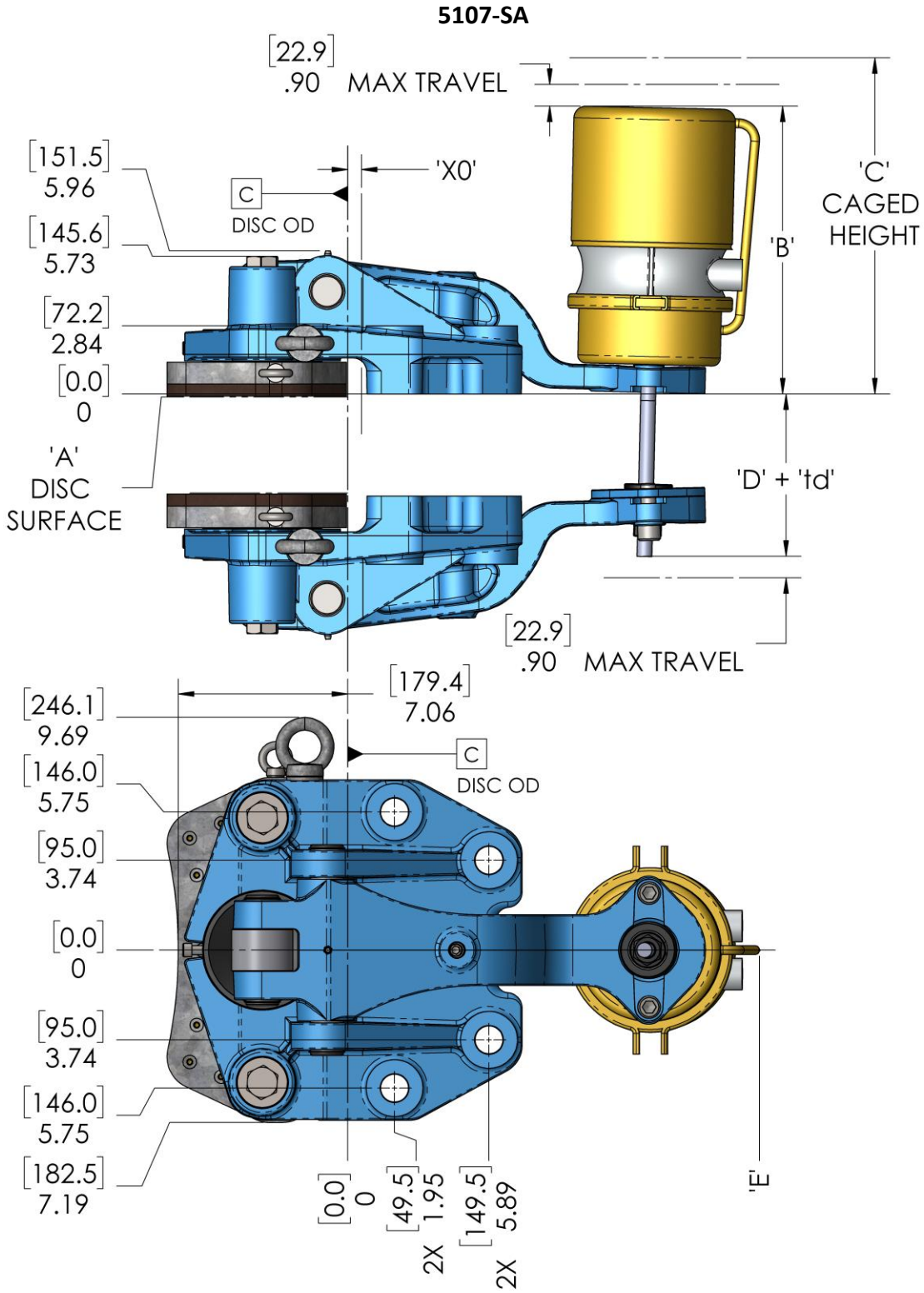

Refer to Table 11 for model dependent dimensions.

Table 11: 5107-SA Installation Dimension Table

Model	DIM 'A'	DIM 'B'	DIM 'C'	DIM 'D'	DIM 'E'	Dim 'td'	Dim 'X0'[1]
5107-SAXXXX-_ _	**0.125 in [3.2 mm]**	-	-	-	-	**Nominal Disc thickness**	**Min 0.35 in[1] [8.9 mm][1]**
5107-SAXXXX-_ 5	**0.250 in [6.4 mm]**						
5107-SA1724P	-	**12.0 in [305 mm]**	**13.4 in [340 mm]**	**2.8 in [70 mm]**	**17.2 in [436 mm]**		
5107-SA2424P		**11.7 in [297 mm]**	**13.2 in [335 mm]**	**2.8 in [70 mm]**	**17.2 in [436 mm]**		
5107-SA2430P		**12.1 in [306 mm]**	**13.3 in [338 mm]**	**2.8 in [70 mm]**	**17.2 in [436 mm]**		

[1]*High Energy applications may require larger disc OD clearance*

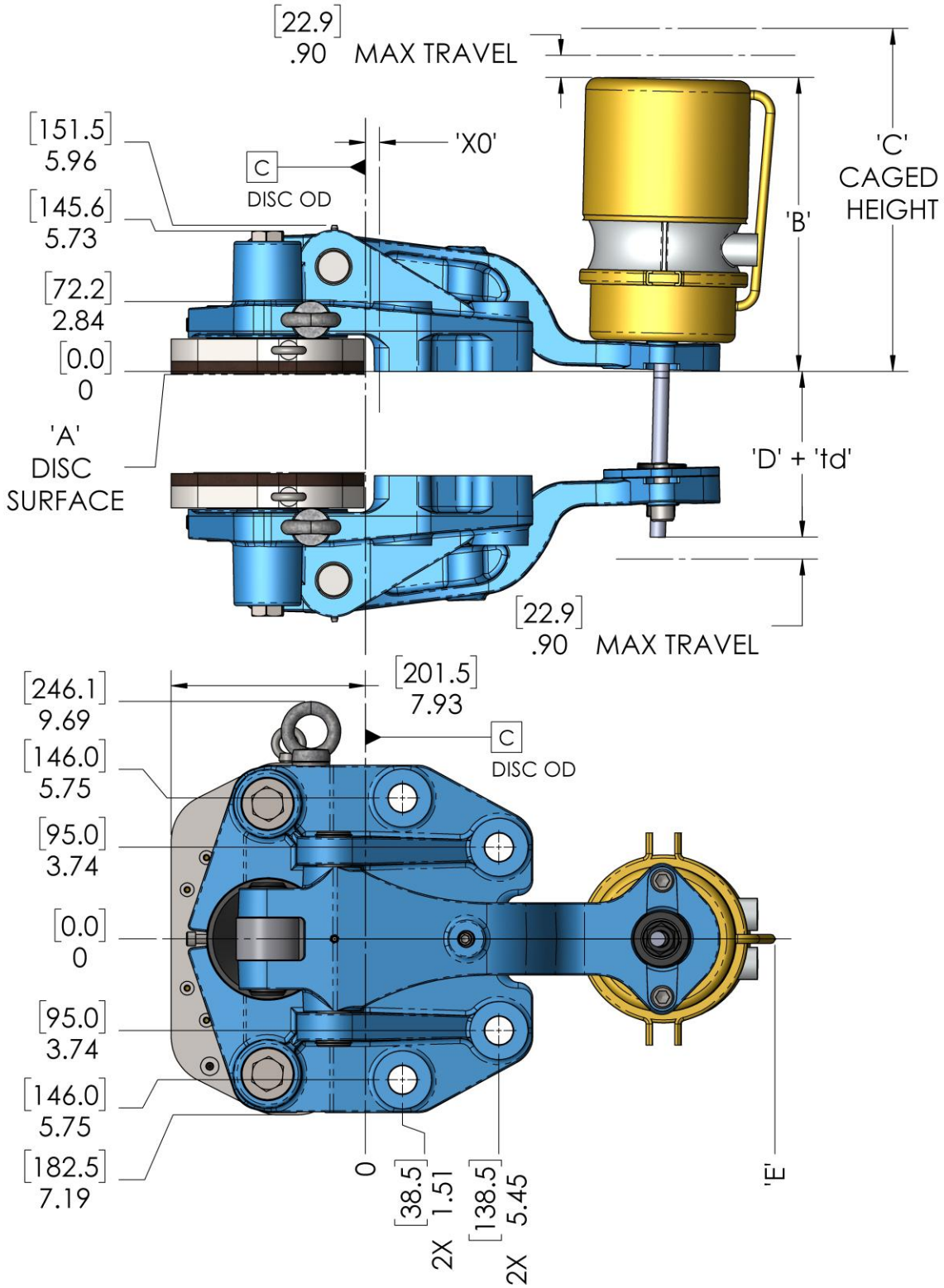

Refer to Table 12 *for model dependent dimensions.*

Table 12: 5108-SA Model Dependant dimensions

Model	DIM 'A'	DIM 'B'	DIM 'C'	DIM 'D'	DIM 'E'	Dim 'td'	Dim 'X0'[1]
5107-SAXXXX-_ _	**0.125 in [3.2 mm]**	-	-	-	-	**Nominal Disc thickness**	**Min 0.35 in[1] [8.9 mm][1]**
5107-SAXXXX-_ 5	**0.250 in [6.4 mm]**						
5107-SA1724P	-	**12.0 in [305 mm]**	**13.4 in [340 mm]**	**2.8 in [70 mm]**	**16.7 in [424 mm]**		
5107-SA2424P		**11.7 in [297 mm]**	**13.2 in [335 mm]**	**2.8 in [70 mm]**	**16.7 in [424 mm]**		
5107-SA2430P		**12.1 in [306 mm]**	**13.3 in [338 mm]**	**2.8 in [70 mm]**	**16.7 in [424 mm]**		

9 APPENDIX B: PARTS LIST DRAWINGS

5107-SA / 5108-SA

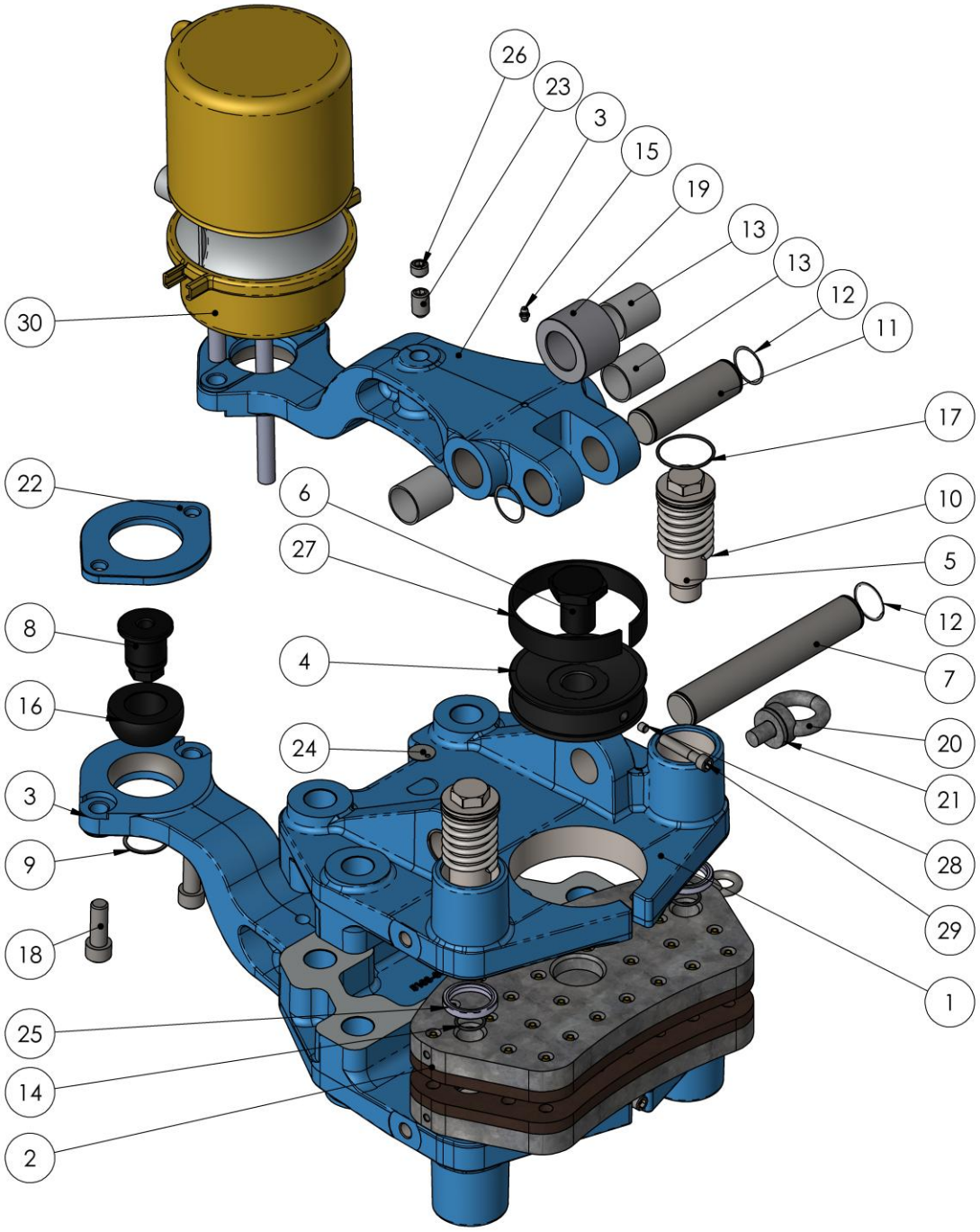

Table 13: 5107-SA / 5108-SA General Parts List

ITEM	QTY.	PART NUMBER	DESCRIPTION
1	**2**	**5108-0001**	**CALIPER BODY; 5108 CALIPER**
2	**2**	**See Table 14**	**SHOE ASSEMBLY; 5107 CALIPER**
3	**2**	**5108-0004**	**LEVER; 5108 CALIPER**
4	**2**	**5108-0021**	**PLUNGER; 5107 CALIPER**
5	**4**	**5108-5000**	**SHOULDER BOLT; 5308/5108 CALIPER SHOE**
6	**2**	**5108-8840**	**ADJUSTMENT BOLT; 5108 CALIPER**
7	**2**	**5108-0020**	**MAIN PIN; 5108 CALIPER**
8	**1**	**5108-0023**	**COLLAR - ADJUSTMENT; 5/8-18 UNF**
9	**1**	**1029-5224**	**RETAINING RING - EXTERNAL; 1-1/2IN, SPIRAL, 2 TURN**
10	**4**	**1201-0259**	**SPRING, COMP, SHOE PIN**
11	**2**	**5108-0024**	**SHOE PIN; 5108 CALIPER**
12	**8**	**1029-5222**	**SPIRAL RING - EXTERNAL; 1-3/8IN / 2 TURN / 18-8**
13	**6**	**1311-2422-28**	**BUSHING - PLAIN; 1-17/32OD X 1-3/8ID X 1-3/4LG; PTFE/STEEL**
14	**4**	**1101-0119-90**	**ORING; 15/16ID X 1-1/8OD X 3/32CS / N90D**
15	**2**	**1501-0301**	**GREASE NIPPLE 1/4-28**
16	**1**	**5108-0022**	**ROD BALL; 2.75IN OD X 1.5IN ID; COMPOSITE**
17	**4**	**1101-0135**	**O-RING, 2-135, NBR70**
18	**2**	**1002-1628**	**SCREW, SCKT HD, 5/8-11 UNC X 1.75 LG, SS**
19	**2**	**5108-0026**	**CAM ROLLER; 65MM OD X 39MM ID;**
20	**2**	**1042-2016**	**LIFTING EYE; M16 / DIN 580 / ZP STEEL**
21	**2**	**1204-0017**	**WASHER - CONICAL SPRING; M16 / DIN 6796 / ZP STEEL**
22	**1**	**5108-0010**	**BALL RETAINER; 5108 CALIPER**
23	**2**	**1016-1616**	**SET SCREW - SCKT C/P; 5/8-11UNC X 1IN LG / 18-8**
24	**2**	**5105-0008**	**TAG; ROUND; 1IN DIA; AISI 304**
25	**4**	**1102-6102**	**ROD WIPER; 1.5x2x0.31IN / PU**
26	**2**	**1016-1608**	**SET SCREW - SCKT C/P; 5/8-11UNC X 1/2IN LG / 18-8**
27	**2**	**5108-7680**	**WEAR RING - PISTON; 5IN OD X 1IN W, COMPOSITE**
28	**2**	**2542-0008**	**FRICTION PLUG**
29	**2**	**1002-1232**	**SCREW, SKT HD, 3/8-16 X 2, 18-8**
30	**1**	**See Table 15**	**ACTUATOR; PISTON; COMBINATION AIR; 17 SERVICE; 24 SPRING**

Table 14: Shoe Assembly Part Number

Caliper Model No.	Item	Qty	Shoe Part No.	Description
5107-SAXXXX-_ _	2	2	5107-LS	Shoe Assembly; 5107 Caliper
5107-SAXXXX-_ 5		2	5107-LS5	Shoe Assembly; 5107 Caliper; 5/8in Lining
5108-SAXXXX-_ _		2	5108-LS	Shoe Assembly; 5108 Caliper
5105-SAXXXX- _ 5		2	5108-LS5	Shoe Assembly; 5108 Caliper; 5/8in Lining

Table 15: Actuator Part Number

Caliper Model No.	Item	Qty	Actuator Part No.	Description
5107-SA1724P-XX	30	1	6217-24-P	ACTUATOR; PISTON; COMBINATION AIR; 17 SERVICE; 24 SPRING
5108-SA1724P-XX				
5107-SA2424P-XX		1	6224-24-P	ACTUATOR; PISTON; COMBINATION AIR; 24 SERVICE; 24 SPRING
5108-SA2424P-XX				
5107-SA2430P-XX		1	6224-30-P	ACTUATOR; PISTON; COMBINATION AIR; 24 SERVICE; 30 SPRING
5108-SA2430P-XX				

10 APPENDIX C: ACTUATOR SERVICE PROCEDURE

For maintenance of the actuator service chamber, refer to the actuator manufacturers service manual and refer to their instructions. A list of different actuator manufacturers used in Kobelt brakes and links to their service manuals are given in Table 16.

Table 16: List of actuator manufacturers and their service manuals.

Actuator Manufacturer	Service manual
Haldex	https://www.haldex.com/globalassets/north-america/documents/actuators/l31171.pdf
MGM	https://www.mgmbrakes.com/application/files/3917/6941/1034/EB_24-001_MGM_Brakes_S-Cam_Drum__Disc_Actuator_Service_Manual_rev._02.pdf

Kobelt Manufacturing Co. Ltd.
8238 129th Street
Surrey, British Columbia,
Canada, V3W 0A6

Sales Tel: +1-604-572-3935
Fax: +1-604-590-8313
Email: sales@kobelt.com
Website: www.kobelt.com

Made in Canada / Printed in Canada

Heiko Epkens, P.Eng (PTP 1005356) Digitally signed by Heiko Epkens, P.Eng (PTP 1005356) Date: 2026.11.25 16:48:38 -07'00'