5019-A DISK BRAKE

AIR APPLIED VERSION

Owner's Operation, Installation & Maintenance Manual

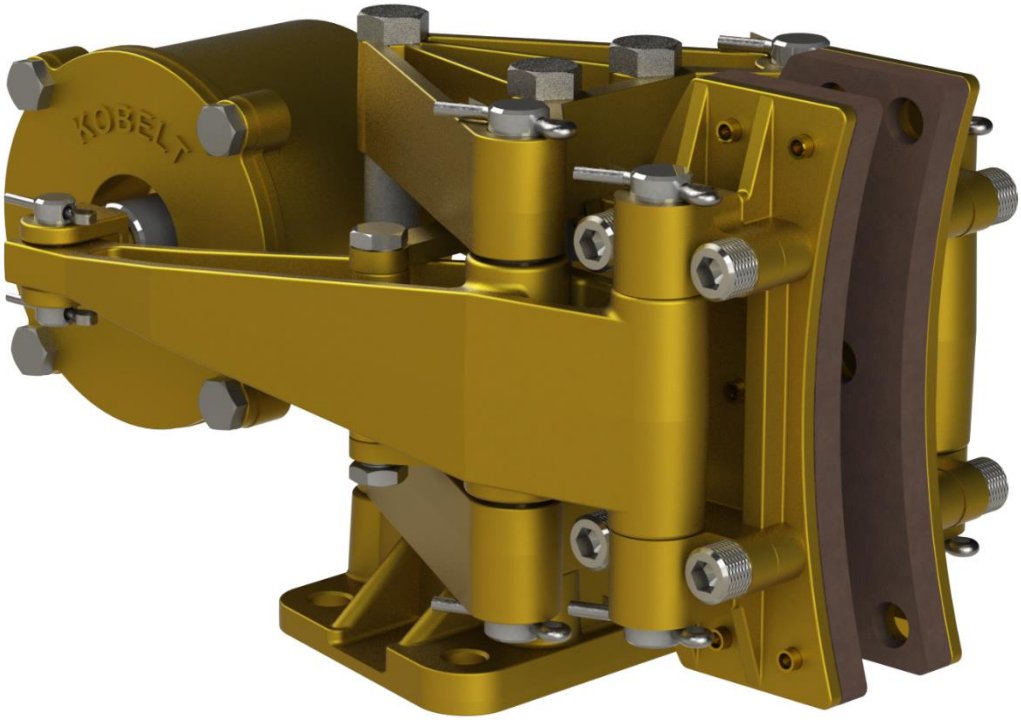

Table of Contents

1 Introduction 4

1.1 Contact Information 4
1.2 Safety Information 4
1.2.1 Safety Alerts 4
1.2.2 Safety Instructions 5
1.2.3 Hazards 5
1.3 Product Description 6
1.3.1 Overview 6
1.4 Technical Data 6
1.5 Model Code Key 8

2 Installation 9

2.1 Preparation 9
2.2 Brake Discs 9
2.3 Caliper brakes 11
2.3.1 Mechanical 11
2.3.2 Piping 12

3 Commissioning 13

3.1 Air Gap 13
3.2 Function Test 13
3.3 Burnishing 13
3.4 Torque Test 14

4 Operation 15

4.1 Functional Requirements 15
4.1.1 Pressure Supply 15
4.2 Service Limits 15
4.2.1 Disc Temperature 15
4.2.2 Ambient Temperature 15
4.2.3 Pressure 15
4.2.4 Disc speed 16

5 Maintenance 16

5.1 Preventative Maintenance 16
5.2 Inspection 17
5.2.1 Pad Wear 17
5.2.2 Seals 17
5.2.3 Pin Wear 17
5.2.4 Brake Disc 17
5.3 Service 18
5.3.1 Lubrication 18

5.3.2 Stroke Adjustment 18
5.3.3 Brake Linings & Shoe Replacement 18
5.3.3.1 Shoe Removal 19
5.3.3.2 Brake Lining Replacement 20
5.4 Recommended Spares 22
6 Revision History 23
7 Warranty 24
8 Appendix A: Technical Drawings 25
9 Appendix B: Parts List Drawings 27

1 INTRODUCTION

1.1 CONTACT INFORMATION

Kobelt Manufacturing Co LTD.
8238 129TH Street
Surrey, British Columbia
Canada, V3W 0A6

Sales Tel:	604-572-3935
Fax:	604-590-8313
Email:	sales@kobelt.com
Website:	www.kobelt.com

For further instructions, please contact our distributors or visit our website.

1.2 SAFETY INFORMATION

1.2.1 Safety Alerts

Throughout this manual, the following symbols, and their accompanying explanation, are used to alert the user to special instructions concerning a service or operation that may be hazardous if performed incorrectly or carelessly. The associated risk levels are stated below.

⚠ DANGER	This symbol indicates an imminently hazardous situation which, if not avoided, will result in death or serious injury.
⚠ WARNING	This symbol indicates a potentially hazardous situation which, if not avoided, could result in death or serious injury.
⚠ CAUTION	This symbol indicates a hazardous situation, which if not avoided, could result in minor or moderate injury.
NOTICE	This symbol informs the reader of events not related to personal injury but which there is a risk of damage to property or equipment.
SAFETY INSTRUCTIONS	This symbol informs the reader of safety-related instructions or procedures.

1.2.2 Safety Instructions

Notice to Installer:

Disregarding the following safety measures can result in an accident causing severe injury to personnel and damage to material assets:

- Only use the product as directed in this manual.
- Never put the product into service if there is evidence of visible damage.
- Never put the product into service before fully completing installation and commissioning.
- Do not carry out any modifications to the product.
- Only use authentic Kobelt spare parts.
- Observe all local regulations, directives and laws during the installation of this product.
- All installation, commissioning and maintenance work must only be conducted by qualified personnel. (For the purpose of this manual, qualified personnel are persons who are familiar with the assembly, installation, commissioning, and operation of the product and who have the qualifications necessary for their occupation.)
- Observe all specifications in this manual. If these guidelines are not followed and damage occurs, the warranty will be voided.

1.2.3 Hazards

⚠ DANGER	**Equipment Starts Automatically:** Brake systems frequently are controlled remotely and may activate suddenly causing bodily harm. Ensure all power sources are locked out prior to performing work.

⚠ WARNING	**Brake Actuators Contain Compressed Springs:** The brake actuators contain springs that are under compression even when the brakes are not pressurized. The springs will release suddenly if disassembled incorrectly posing a risk of serious injury or death. Do not attempt to disassemble the actuators without clear work instructions and training.

⚠ WARNING	**Pinch Points:** Brakes contain numerous pinch points which can cause serious injury. Ensure all power sources are locked out prior to performing work.

⚠ WARNING	**High Pressure Fluids:** Kobelt lever brakes use high pressure hydraulics. Ensure all pressure is exhausted and the pressure source locked out prior to performing work.

⚠ WARNING	**Hot Surfaces:** Disc brakes are capable of making the surfaces of the brake disc dangerously hot when burnishing or during braking events. Ensure the disc is adequately guarded to prevent inadvertent contact with the disc.

SAFETY INSTRUCTIONS	**Airborne Dust:** Brake linings contain fibers that may become airborne during cutting or sanding operations. Over exposure to these dusts should be considered hazardous. Use NIOSH approved respirators when working with brake linings. Request a MSDS for further information.

1.3 Product Description

1.3.1 Overview

The diagram below shows a typical Kobelt caliper brake with all the major components identified. All of the Kobelt caliper brakes can be fitted with either air applied, hydraulic applied, spring applied with air released or spring applied with hydraulic released actuators depending on the required service.

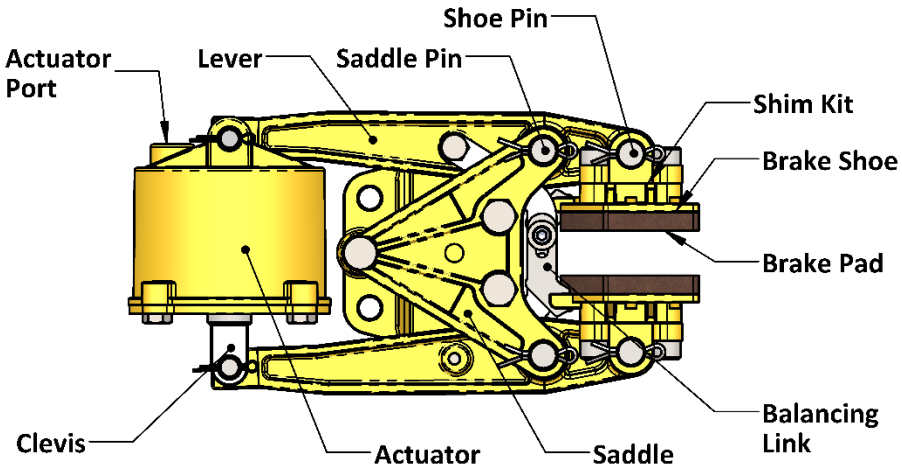

Figure 1: Caliper Brake Nomenclature

1.4 Technical Data

MODEL	5019-A	5019-AX
Normal Force:	0 …2250 lbs [0-19.2 KN]	
Maximum Pressure:	100 psi [6.9 bar]	
Port Size:	¼ NPT	
Actuator Volume:	7.5 in^3 [120 cc]	
Temperature Range:	-40°F …+120°F [-40°C …+49°C]	
Disc Thickness:	3/4 in [19 mm]	
Minimum Disc Diameter:	9 in [229 mm]	24 in [610 mm]
Maximum Disc Diameter[2]:	unlimited	unlimited
Pad area (total):	17.4 in^2 [112 cm^2]	28.8 in^2 [186 cm^2]
Pad Life:	300 hp-hr [224 kw-hr]	560 hp-hr [418 kw-hr]
Weight:	14 lbs [6.4 kg]	17 lbs [7.7 kg]

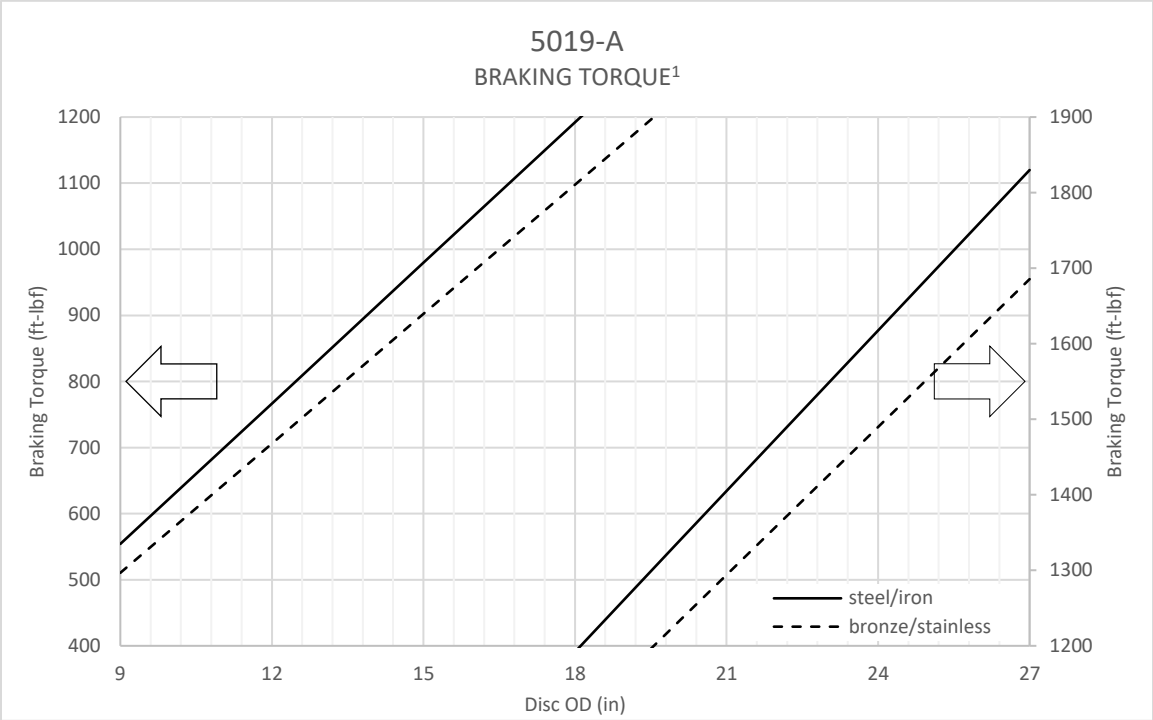

1) Values in this chart are theoretical and for reference only. They are based on properly bedded and burnished linings acting on a rotor at 20°C and manufactured to required specifications.

2) Requires a minimum 2.38 in [60 mm] wide face

Technical data and specifications are also available from our datasheet posted on www.kobelt.com or the technical drawings in Appendix A.

1.5 Model Code Key

5019-A□-□-□-□

Shoe options

(blank)	= standard
X	= over-sized shoe

Friction material

(blank)	= standard
N	= non-sparking
C	= low COF (.12-.15)
E	= mid COF (.25-.28)

Disc thickness

(blank)	= 0.750 in
063	= 0.625 in
050	= 0.500 in
038	= 0.375 in

Actuator handing

(blank)	= air inlet on left hand side
RH	= air inlet on right hand side

Mounting code

(blank)	= foot mounted
W	= side mounted

2 INSTALLATION

2.1 PREPARATION

The foundation plate to support the brake caliper must be designed to withstand the maximum braking forces generated by the brake caliper. The foundation must also be flat to ISO tolerance grade IT8 and square to the brake disc. See Appendix A for key installation dimensions. The brake pedestal must be designed to allow the mounting bolts to be inserted from underneath.

The rotating element should have bearings sufficient to carry the weight of the disc and also resist the additional stress when the disc brake is applied.

The spigot that centers the brake disc must not be designed in such a way that it impedes the thermal expansion of the disc.

Actuator ports are plugged to prevent contamination of the seals. Remove the plugs prior to connection to the piping.

Brake discs are shipped with a light rust inhibitor applied to the surfaces. Remove the rust inhibitor using solvent and a cloth prior to installation.

Any guarding around the brakes must provide enough room to allow full extension of the bake actuators plus full pad wear adjustment.

2.2 BRAKE DISCS

The brake disc must be installed onto the rotating element before installing the caliper. Brake discs must meet the following requirements:

Table 1: Brake Disc Requirements

MODEL	5000-SERIES
AXIAL RUN OUT	IT9 (TIR)[1]
RADIAL RUN OUT	IT11 (TIR) [1]
FLATNESS	.002 in [.05 mm]
PILOT FIT	H9/f8
SURFACE FINISH	63 micro inches [1.6 micrometers] RMS
SURFACE HARDNESS	Light Duty[2] HB135 minimum
	Heavy Duty[3] HB235 minimum

[1] International tolerance class. Allowable run out is proportional disc O.D.

[2] Parking brakes and emergency brakes with stopping times of 10 seconds or less are considered light duty.

[3] Ventilated discs are exempted from this requirement

To achieve the runout tolerance the mounting face on the rotating element must be machined flat. Excessive run-out of the disc could cause premature wear of the linings, caliper pins, lever journals as well as the actuators.

The disc mounting bolts used must be of a suitable size and grade to safely resist the brake torque plus the stresses induced from thermal expansion of the disc. For high temperature disc applications, the holes for the mounting bolts must be machined oversized to allow the disc to expand during operation. Ensure that adequate washers are used to bridge the gap between the bolt and bolt hole.

Table 2: Mounting Bolt Radial Clearance

MOUNTING BOLT RADIAL CLEARANCE				
Disc Bolt Circle	**Maximum Disc Temperature, °F [°C]**			
In [mm]	400 [204]	500 [260]	600 [316]	700 [371]
6 [152]	.006 [0.2]	.008 [0.2]	.010 [0.3]	.013 [0.3]
8 [203]	.009 [0.2]	.011 [0.3]	.013 [0.3]	.017 [0.4]
10 [254]	0.011 [0.3]	0.014 [0.4]	0.017 [0.4]	0.021 [0.5]
14 [356]	0.015 [0.4]	0.020 [0.5]	0.024 [0.6]	0.029 [0.8]

To reduce the size of the mounting bolt clearance hole it is recommended to offset the bolt circle on the brake disc inwards the required amount for radial clearance. The end result is the brake disc will have a slightly smaller bolt circle than the hub and the required radial clearance will be on the side where it is needed.

⚠WARNING	Do not use fitted bolts for installing brake discs. The bolt holes must be over sized to permit uninhibited expansion.
⚠WARNING	Do not secure a brake disc to a rotating element by welding.
⚠WARNING	Do not paint the cooling fins of a ventilated disc. The cooling efficiency will be compromised, and overheating may result.
⚠WARNING	**Keep Discs free from contaminants:** Failure to keep the brake discs free some contaminants such as dirt and oil can result in the brake not generating the rated brake force. Discs and brake pads that have been contaminated must be cleaned thoroughly. A burnishing procedure should follow cleaning before returning the brake to service.

If the disc was damaged during installation with nicks or welding marks, remove the defects before putting into service.

For cases where a disc guard or some protective cover is required for a ventilated disc ensure that the guard does not compromise the performance. An improperly designed cover or shield may cause air recirculation through the disc or radiant heat reflection, which could result in the disc overheating. The cooling air pumped through the disc must be exhausted away from the outer diameter of the disc to allow fresh, cool air to enter the inner vent opening of the disc.

2.3 CALIPER BRAKES

2.3.1 Mechanical

Perform the following steps to properly install a caliper brake:

1. Lower the brake onto the brake pedestal and center over the mounting holes.
2. Using feeler gauges to ensure that the brake air gap is equal on both sides of the disc.

NOTICE	Ensure the caliper is centered. The balancing link will be subjected to excessive stresses that will damage it.

3. Position the brake so that the outer radius of the brake shoe is in full contact with the Disc. Do not move the brake too close as enough radial distance must be provided to allow for disc expansion without causing interference between the outer circumference of the disc and the inner caliper frame.
4. Manually apply the brake onto the disc. The brake shoes will naturally align with the disc.
5. Probe under the brake base with feeler gauges to determine the shimming requirement.
6. Manually release the brake again and lift the brake up approximately two inches.
7. Insert the shims determined from step 6. Use ANSI shims that straddle the mounting bolts.
8. Insert the mounting bolts from underneath the pedestal using appropriate flat washers. The nut must be on top of the brake foot. The mounting bolts must be of SAE grade 5 or better. It is recommended to use a thread locking product such as Loctite® to ensure a vibration resistant and secure joint.
9. Lower the brake down and tighten the mounting bolts to the recommended preload.

2.3.2 Piping

The piping to the brakes must be adequately sized to ensure rapid response times in all weather conditions. The piping must be selected to safely withstand the pressures required to operate the brakes. Secure the piping against vibration with pipe clamps per the schedule in the table below.

Table 3: Pipe Clamp Table

PIPE CLAMP TABLE				
PIPE SCHEDULE	3/8”-½” tube [DN6]	¼” – 1/2” pipe ½”-3/4” tube [DN8-DN15]	¾” pipe 1”-1.25” tube [DN20]	1” pipe 1.50” tube [DN25]
CLAMP SPACING	3 ft [914 mm]	4 ft [1219 mm]	5 ft [1524 mm]	6.5 ft [1981 mm]

All piping must be cleaned prior to connection to the actuators. Welded carbon steel piping must be pickled to remove the scale produced by welding.

The connections to the brake actuators must be made by hoses of suitable rating to accommodate the movement of the brake levers.

The brake actuators are equipped with different sizes of pressure ports. Consult the technical drawing of the relevant model code for the specific port data. Install the port fitting using thread sealant and tighten to 2 - 3 turns from finger tight. Use brass pipe fittings for making the connection as steel fittings are too heavy and may split the port.

NOTICE	Do not over tighten the fitting in the actuator port as damage to the actuator may occur.

For operation in sub-zero temperatures down to a minimum of 0°F [-20°C] the air must be dried to a dew point of -50°F [-44°F]

⚠WARNING	Failure to adequately dry the compressed air supply may result in the brake valve freezing and rendering the brakes inoperable in sub-zero weather conditions.

3 COMMISSIONING

3.1 AIR GAP

Prior to putting the brakes into service ensure that the airgap between the brake pads and disc when the brakes are released is set to .01" [.25 mm] per shoe. Adjust if necessary, per section 5.3.2.

3.2 FUNCTION TEST

Before burnishing the brakes perform a quick inspection and function test of the brakes:

(1) Ensure that all mounting bolts are properly installed.

(2) Ensure proper running clearance (air gap) with the disc.

(3) Ensure unobstructed movement of the brake levers for full actuator extension.

(4) Ensure the brake disc surface is clean. Remove all contamination from the disc with cleaning solvent.

(5) Check the source of fluid supplied that it complies with the specified pressure range and that it is properly interlocked with other machinery such as clutches, electric motors, etc.

(6) Check that all bolts are tight and cotter pins are in place.

(7) Cycle the brakes and ensure that the brakes are operational

3.3 BURNISHING

Burnishing is required in order to achieve rated brake torque. The process of burnishing removes minor contaminants from the rubbing surfaces and improves the degree of contact between the brake pad and disc.

Before burnishing, the brake disc must be checked to ensure it is free from contamination and oil. Use a solvent and cloth to remove any oil residue. Slight surface rust will be removed during the burnishing process, but heavy rust should be removed prior to burnishing.

If present, safety interlocks of the drive mechanism should be temporarily defeated to allow the disc to be driven with the brake partially applied.

The temperature of the disc surface must be monitored during the burnishing process and kept between 250°F (120°C) and 500°F (260°C). If the upper temperature is reached, pause the burnishing process until the disc is cooled to the lower limit.

Extreme care must be taken not to overheat the disc during the process. On water cooled discs it may be necessary to limit the flow of cooling water in order to achieve the necessary disc temperature for effective burnishing.

⚠WARNING	Disc temperature must not exceed 700°F (371°C) or permanent degradation of the lining may occur.

Burnishing is best achieved by applying the maximum torque and minimum speed that the drive can tolerate. Depending on the configuration of the brake system it may be necessary to reduce the burnishing torque by;

a) Partially applying the brake with fluid pressure to a level that the drive can tolerate, or

b) In systems with more than one brake, isolate all but one brake and burnish one brake at a time.

Three important points to consider when burnishing are;

i. The temperature of the disc must be closely monitored. Excessive heat will damage the friction linings.
ii. The duration of burnishing varies with each application.
iii. Burnishing is not complete until the brake is producing rated torque. This will be indicated by the motor current while burnishing.

⚠WARNING	Failure to properly burnish will not allow the brake to produce adequate torque for the intended duty.

3.4 Torque Test

Before putting equipment into service, confirm that full rated braking torque has been achieved through load testing or a torque test against the drive motors. If full brake torque has not been achieved, continue burnishing.

4 OPERATION

4.1 FUNCTIONAL REQUIREMENTS

4.1.1 Pressure Supply

It is necessary to size air compressors and storage tanks to provide sufficient air for the intended duty of the brakes.

This brake actuator and control valves equipped with “U” cups and “O” rings require lubrication in order to provide long service life. Unlubricated seals will have excessive friction and wear. The oil that is required for the lubricator should be a hydraulic type with a viscosity grade of 10 to 32 centistokes. Heavy oils do not work well for lubricators.

The main supply line to the brake system should be equipped with a filter, and regulator. The filter’s function is to remove moisture and dirt in the system and the regulator will provide a constant air pressure to the control system. If the brake system is operating in sub-zero temperatures, it is recommended to have an air dryer in the system to remove all moisture. Alternatively, a lubricator can be filled with methyl hydrate (wood alcohol) to prevent freezing of the air system.

4.2 SERVICE LIMITS

4.2.1 Disc Temperature

The Kobelt brake lining achieves maximum friction at 300°F. Over 300°F the brake begins to fade or experience diminishing friction. The maximum operating temperature of the brake linings is 700 ^{0}F [371^0 C]. Temperatures in excess of this limit will permanently damage the linings and require replacement.

4.2.2 Ambient Temperature

In sub-zero temperatures, ventilated discs must be warmed up gently to avoid causing excessive thermal stresses in the disc. Failure to do so could cause the disc to crack. Once the temperature of the disc is out of freezing condition it can be used as normally intended.

Operating temperature of standard brake actuators is -40°C [-40°F] to 120°C [248°F]

4.2.3 Pressure

Do not allow the supply pressure to exceed the values given in the Technical Data section. If the available supply pressure exceeds the maximum allowable working pressure, then some form of a pressure regulator is required. Also, the pressure supply system must be equipped with a safety relief valve to ensure the given maximum allowable working pressure.

4.2.4 Disc speed

The potential imbalance in the ventilated disc could be detrimental to rotating equipment at high speeds. For running speeds greater than the values listed in the table below the discs must be balanced. Under no circumstances must the running speed exceed the value given in the right-hand column.

Table 4: Maximum Disc Speeds

Part Number	Nominal OD		Max. Speed	
	inch	mm	rpm	
0.75" x 2.0" Series			**Standard**	**Balanced**
0.75-2-09	9	229	2890	6150
0.75-2-12	12	305	2010	4550
0.75-2-15	15	352	1540	3600
0.75-2-18	18	457	1250	3000
0.75-2-20	20	508	1110	2680

5 MAINTENANCE

5.1 PREVENTATIVE MAINTENANCE

Maintenance Schedule

Maintenance Item	Monthly	Annually	5 years
Inspect for leaks	✓		
Measure air gap	✓		
Determine pad life	✓		
Lubricate pivot pins		✓	
Inspect brake disc		✓	
Torque Test		✓	
Inspect Brake pins			✓
Service Actuators			✓

5.2 INSPECTION

5.2.1 Pad Wear

The running clearance (air gap) between lining and disc must be maintained within the specified limits. Failure to do so will result in sluggish brake response and excessive air consumption. When the running clearance has reached 0.03” [.8 mm] the brake must be adjusted back to 0.01” [0.25 mm] per shoe. Refer to section 5.3.2.

For pressure applied brakes maintain the proper running clearance between the shoe and the disc to ensure fast response and minimize the air consumption.

The maximum allowable pad life has been reached when the brake pad has worn down to 3/16” [4.8 mm] thick. The lining must be replaced before the shoe lining bolts or rivets start making contact with the brake disc.

5.2.2 Seals

The actuator seals should be inspected on a periodic basis. For air applied brakes apply air pressure to the actuators and listen for any hissing sound that would indicate a worn or ruptured seal.

5.2.3 Pin Wear

The pivot pins must be removed for inspection once every five years. If there is any evidence of heavy scoring more than .01” [.25 mm] deep or if any area of the pin has been worn down by more than .01” [.25 mm] then replace the pins.

5.2.4 Brake Disc

The brake disc must be inspected periodically to monitor the condition of the braking surface. When the condition of the braking surface has deteriorated to the point that the quality requirements in section 2.2 are no longer met the disc must be removed and resurfaced or replaced. Follow the minimum thickness allowances in the table below as a guideline for when a disc must be replaced.

Table 5: Brake Disc Minimum Thickness Allowances

Brake Disc Minimum Thickness		
Disc Series	**Original Thickness in [mm]**	**Minimum Thickness in [mm]**
0.75-2-XX	0.75 [19]	0.71 [18]

NOTICE	When re-machining the disc surface, equal amounts must be taken off of each face.

5.3 SERVICE

5.3.1 Lubrication

Disc brake calipers equipped with spring applied, air released actuators must have a lubricator in the control air system using light hydraulic oil as a lubricant. This is to prevent premature seal wear and reduce seal friction.

All Kobelt calipers, during assembly, are pre-greased on the shoe pin and saddle pin with a Lithium based NLGI 2 grease. These pins must be re-greased no less than once annually.

5.3.2 Stroke Adjustment

Follow the procedure below to adjust the brake shoe running clearance back within specifications.

Procedure for Adjusting Air Gap:

1. Remove cotter pins from clevis pin
2. Slide the clevis pins out
3. Swing the actuator away from lever
4. Rotate Clevis to desired position (1 full turn of clevis = 0.025in/0.6mm of shoe movement). Turn counterclockwise to decrease clearance and clockwise to increase.
5. Return actuator to position and insert pins, cotter pins and bolts.

Note:

1. When the brake linings are replaced it will be necessary to reset the clevises by turning inward to allow for the extra thickness of a new lining.

5.3.3 Brake Linings & Shoe Replacement

The linings must be replaced before the rivets make contact with the disc. To replace the brake lining, it is required to remove the shoes from the brake caliper. Refer to Table 6, Table 7 and Table 8 for the list of tools, spare parts and technical specifications relevant to replacing the shoes.

Table 6: Brake Lining Removal Tools/Consumables

Tool/Consumable	Application
5/16in Hex key wrench	Pivot bolt installation
Torque wrench, 150 in.lbs capacity	
Loctite 243	Fastener retention
NLGI Grade 2 Lithium Grease	Shoe pin lubrication
3/16" Swage Tool for Tubular Rivets **https://shop.hansonrivet.com/product/ht-171-hand-rivet-clincher-for-3-16-diameter-rivet/**	Rivet swaging
Variable Speed Drill	Rivet removal
3/16" Drill Bit	

Table 7: Brake Lining Removal Purchase Parts

Part number	Description	Qty	Recommended/ Required
5019-LS	Brake Shoe and Linning Assembly, 5/16 in K5	2	Required*
5019-0007	Lining, 5019, 5/16 in K5	2	Required*
1039-0352	Cotter Pin 1/8 X 1 in 18-8	4	Recommended
1002-1112	Screw, SKT HD, 5/16-18 X 3/4 in, 18-8	8	Recommended
1033-0807	Rivet, 3/16 X 7/16 in	12	Required

Table 8: Brake Lining Removal Specifications

Specification	Value
Pivot block bolt torque	112 in-lbs [12.7 Nm]
Minimum Rivet Swaging Force	2200 lbs [9.8 kN]
Maximum Rivet Hole Size	0.198” [5.04 mm]

5.3.3.1 Shoe Removal

Following the figure below, remove the brake shoe from the caliper. When reinstalling the shoes and pivot blocks reinstall the shoe pin first to align the pivot blocks before tightening screws ‘C’. It is recommended to apply a thread locking compound such as Loctite 243 to shoe screw ‘C’ threads. Tighten screws ‘C’ to 112 in-lbs [12.7 Nm].

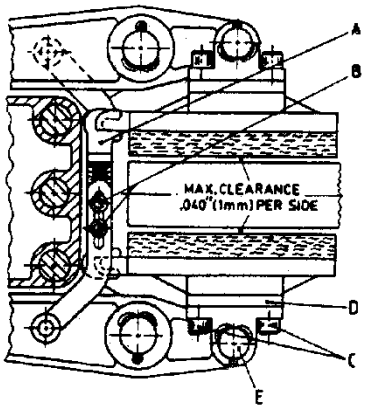

SHOE REMOVAL

1. Remove bottom cotter pins from pins ‘E’.
2. Remove pins ‘E’ by pulling upwards.
3. Remove shoes by sliding radially forward to clear the ends of the levers.

When re-installing the shoes into the caliper assembly, be sure to re-engage the balancing links “A”.

If there is insufficient room radially to remove the shoe, then screws ‘C’ must be removed.

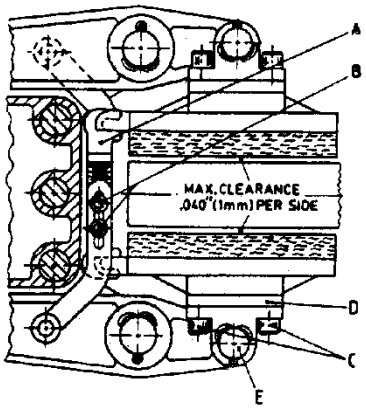

BALANCING LINK ADJUSTMENT

To adjust;

1. Loosen screws ‘B’,
2. Apply brakes onto the disc,
3. Ensure link ‘A’ has no tension on it. Adjust if necessary.
4. Tighten screws ‘B’

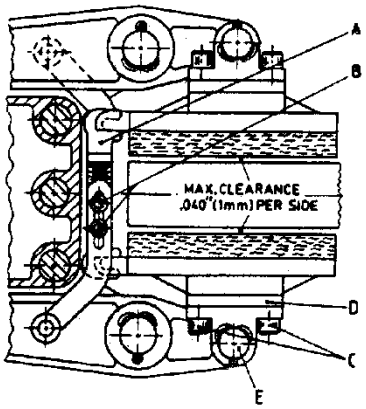

SHOE INSTALATION

1. Apply lithium grease to shoe support holes, shoe pin and caliper lever holes.
2. Align shoe supports holes with the caliper lever holes ‘E’.
3. Insert shoe pin through brake shoe and caliper lever ‘E’
4. Insert cotter pin to shoe pin at point ‘E’
5. Tighten screws ‘B’

5.3.3.2 Brake Lining Replacement

To replace the brake lining, the brake shoe must be removed. Refer to section 5.3.3.1: Brake Shoe Removal for further instruction.

1. Drill out preexisting rivets from shoe with a 3/16” drill.
2. Remove brake lining from shoe.
3. Inspect shoe(s) for wear or damage. Ensure rivet holes are clear of damage or debris. If the rivet holes on the shoe are larger than 0.198” or the shoe face has become damaged, the shoe must be replaced.
4. Place brake lining on top of shoe and align the rivet holes of the brake lining to the brake shoe.
5. Place 3/16” rivets into each rivet hole and swage each rivet to 2200 lbs. using a 3/16” hand rivet clincher for tubular rivets as shown in Figure 2: Rivet & Brake Shoe Alignment. A 3/16” hand clincher is given in Table 6: Brake Lining Removal Tools/Consumables.

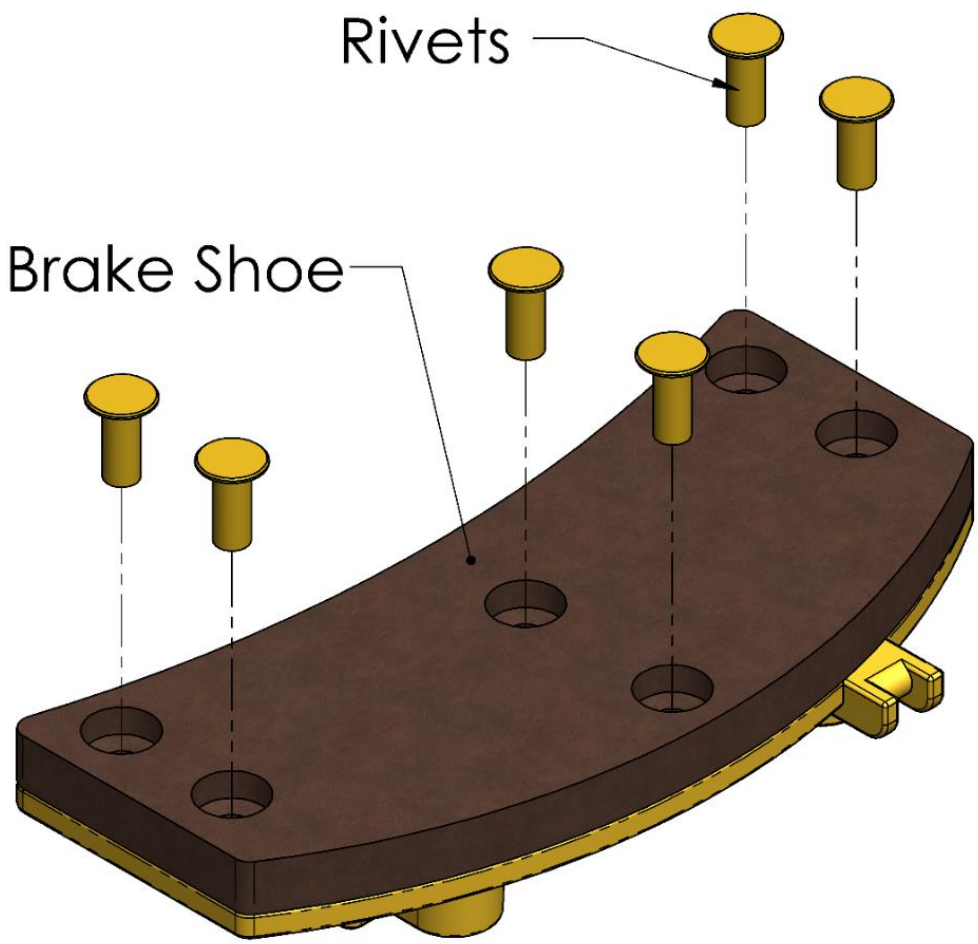

Figure 2: Rivet & Brake Shoe Alignment

6. Verify the lining is securely fastened by checking the movement of the brake lining against the shoe.
7. Reattach shoe to the brake caliper using the steps previously mentioned in section 5.3.3.1 Shoe Removal.

5.4 Recommended Spares

The spare parts kept on hand will depend on the severity of the service. As a minimum Kobelt recommends keeping the following parts for each brake in service:

1. One Lined set of brake shoes
2. One set of brake pads with rivets
3. One actuator
4. Two seal kits

Refer to the parts list drawings in Appendix B for a complete list of parts.

NOTICE	It is recommended that any required service work on a Kobelt unit be performed by a factory authorized service representative. Please contact the nearest Kobelt authorized distributor for assistance.

The table below itemizes which kit/spare part numbers change with the various brake configuration options. Please reference this table to ensure you receive the correct parts.

Table 9: Configuration Kit Numbers

Configuration Kit Numbers		
Disc Code	**Shim Kit**	**Disc Thickness**
-063	5019-0625	0.625 in
-050	5019-0500	0.500 in
-038	5019-0375	0.375 in
Friction Code	**Lined Shoe**	**Friction Material**
-N	5019-LSN	non-sparking
-C	5019-LSC	low COF (.12-.15)
-E	5019-LSE	mid COF (.25-.28)
Shoe Code	**Lined Shoe**	
-X	Add ‘X’ to end of part numbers above	

6 REVISION HISTORY

Document Revision	Release Date	CO	Author	Revision Summary
D	2026-10-09	01535	AJ	• Section 5.3.3: Added tables for required parts, tools and specifications for lining replacement. • Section 5.3.3: Added sub sections 5.3.3.1 & 5.3.3.2 for instruction on shoe removal and lining replacement.
C	2026-04-24	01448	GG	• Appendix B: 5019-LS, 5019-LSX, changed rivet to 1033-0807.
B	2026-01-22	01393	GG	• Section 2.2: Added warning about keeping brake discs clean. • Section 5.3.3: Added recommendation to apply thread locking compound to shoe bolts. • Section 5.4: Correct shoe kit part numbers.

7 WARRANTY

Kobelt Manufacturing Co. Ltd. ("Kobelt") warrants the Products and Parts manufactured by Kobelt to be free from defects in workmanship or material and that said products are designed mechanically and functionally to perform to specifications.

This warranty is effective providing:

- The equipment is used within the intended operating conditions and in accordance with Kobelt recommendations
- The equipment is installed according to equipment diagrams, specifications and recommendations which Kobelt has provided

This warranty becomes invalid if the factory supplied serial number has been removed or altered on the product. This warranty does not cover cosmetic damage or damage caused by an act of God, accident, misuse, abuse, negligence or modification of any part of the product. This warranty does not cover damage due to improper operation or maintenance, connection to inappropriate equipment or attempted repair by anyone other than an authorized Kobelt representative.

Upon identification of a potential issue or defect with a Kobelt Product or Part, the Warranty Applicant ("Applicant") must immediately contact Kobelt and describe the issue in writing, by letter, fax, email or other electronic conveyance. Kobelt will then assess the cause of the defect, and determine warranty applicability and appropriate remediation.

If any part is found to be defective, Kobelt will replace said part FOB the Kobelt factory provided that any such defective part is returned by the Buyer with freight and applicable forwarding charges prepaid by the Buyer. Kobelt's sole obligation to the Applicant will be to repair or replace the defective part with same or similar product, to a maximum value of the list price of the product or part. The Kobelt warranty does not cover labour charges, travel or any other associated expenses.

All Products and Parts manufactured by Kobelt, with the exception of brake discs and pads, are subject to a warranty against manufacturer's defects in materials or workmanship for a period of two (2) years from the date of purchase. Brake discs are subject to a one (1) year warranty period, and brake pads and linings are not covered by warranty.

Kobelt will be responsible for all Products or Parts sold by Kobelt but manufactured by 3rd party manufacturing companies. However, these products and parts are subject to applicable 3rd party warranties, and may not be the same as the Kobelt warranty.

8 APPENDIX A: TECHNICAL DRAWINGS

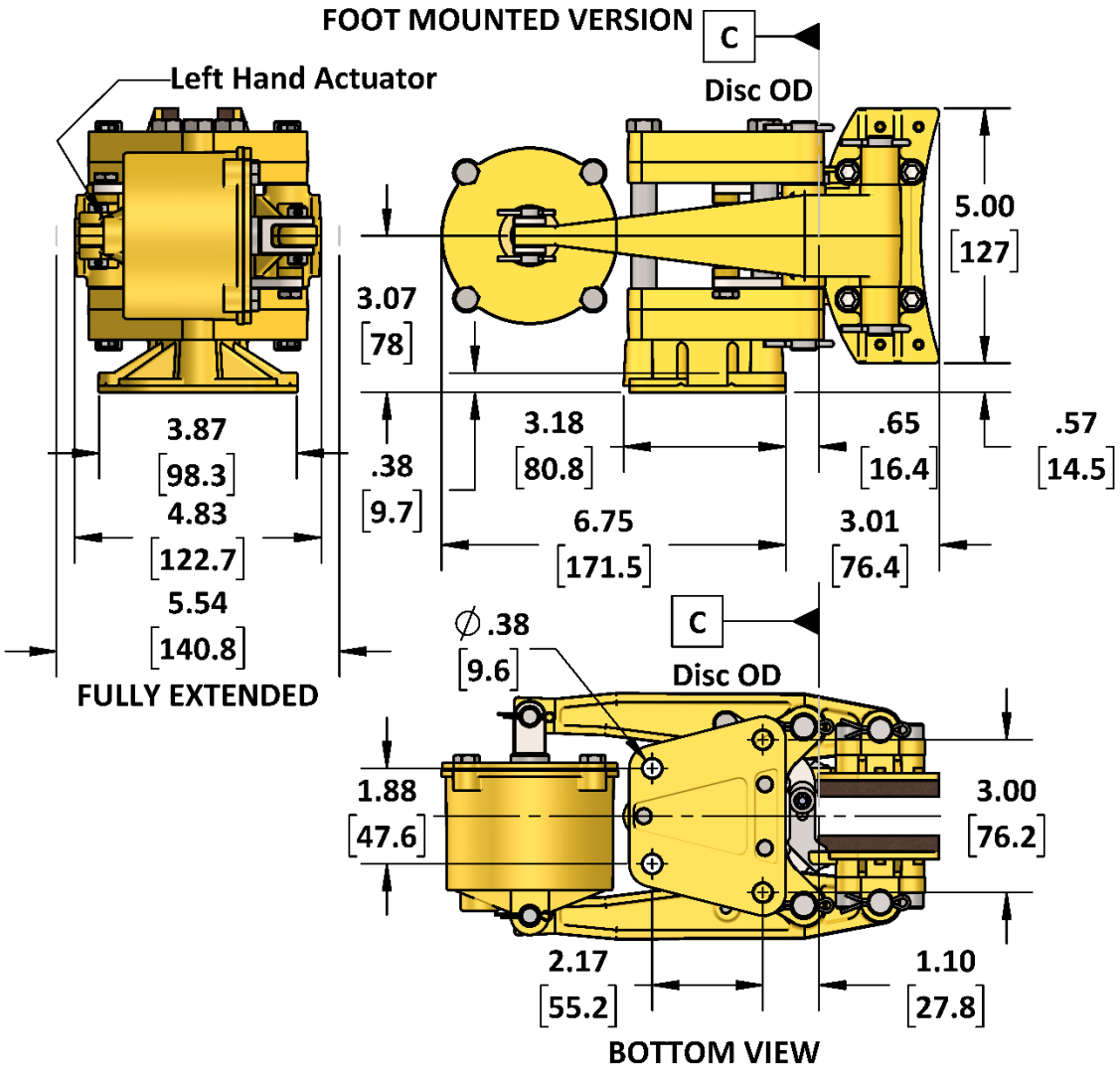

SIDE MOUNTED VERSION

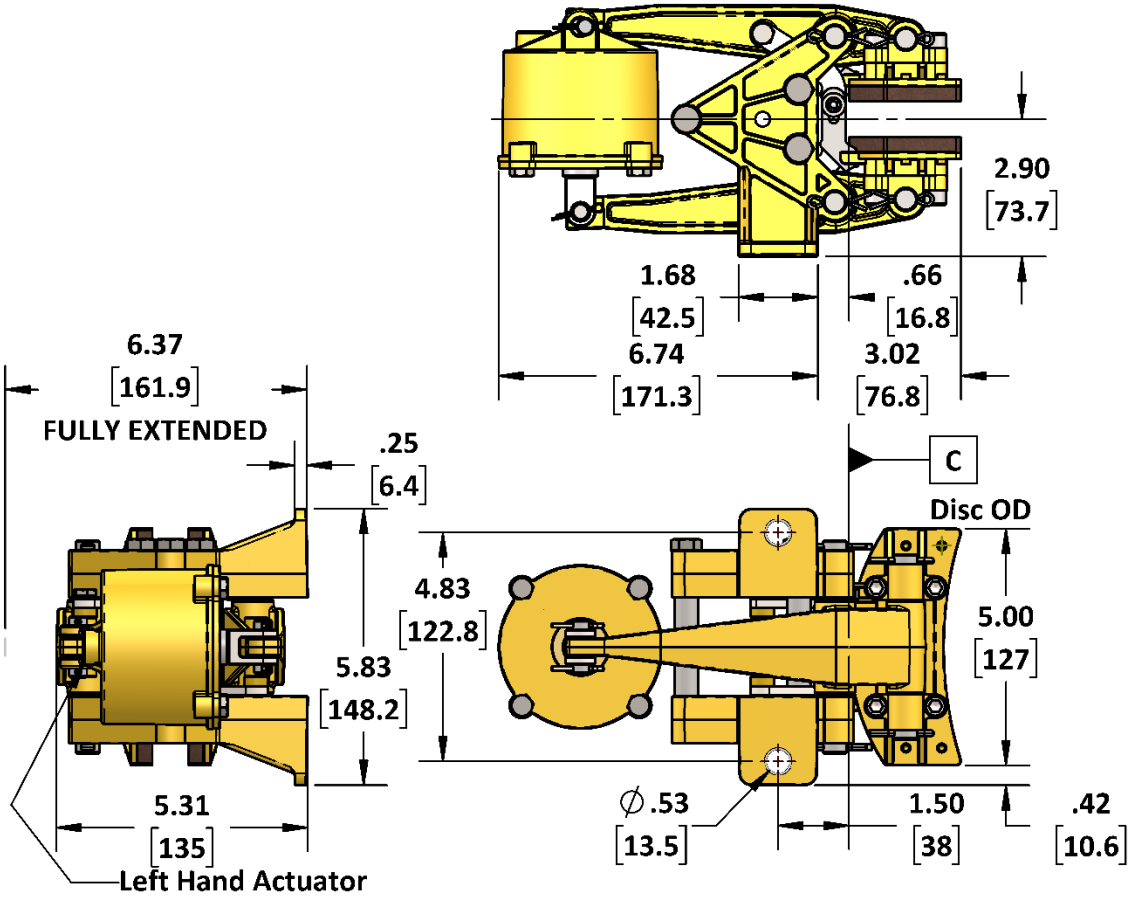

9 APPENDIX B: PARTS LIST DRAWINGS

5019-A

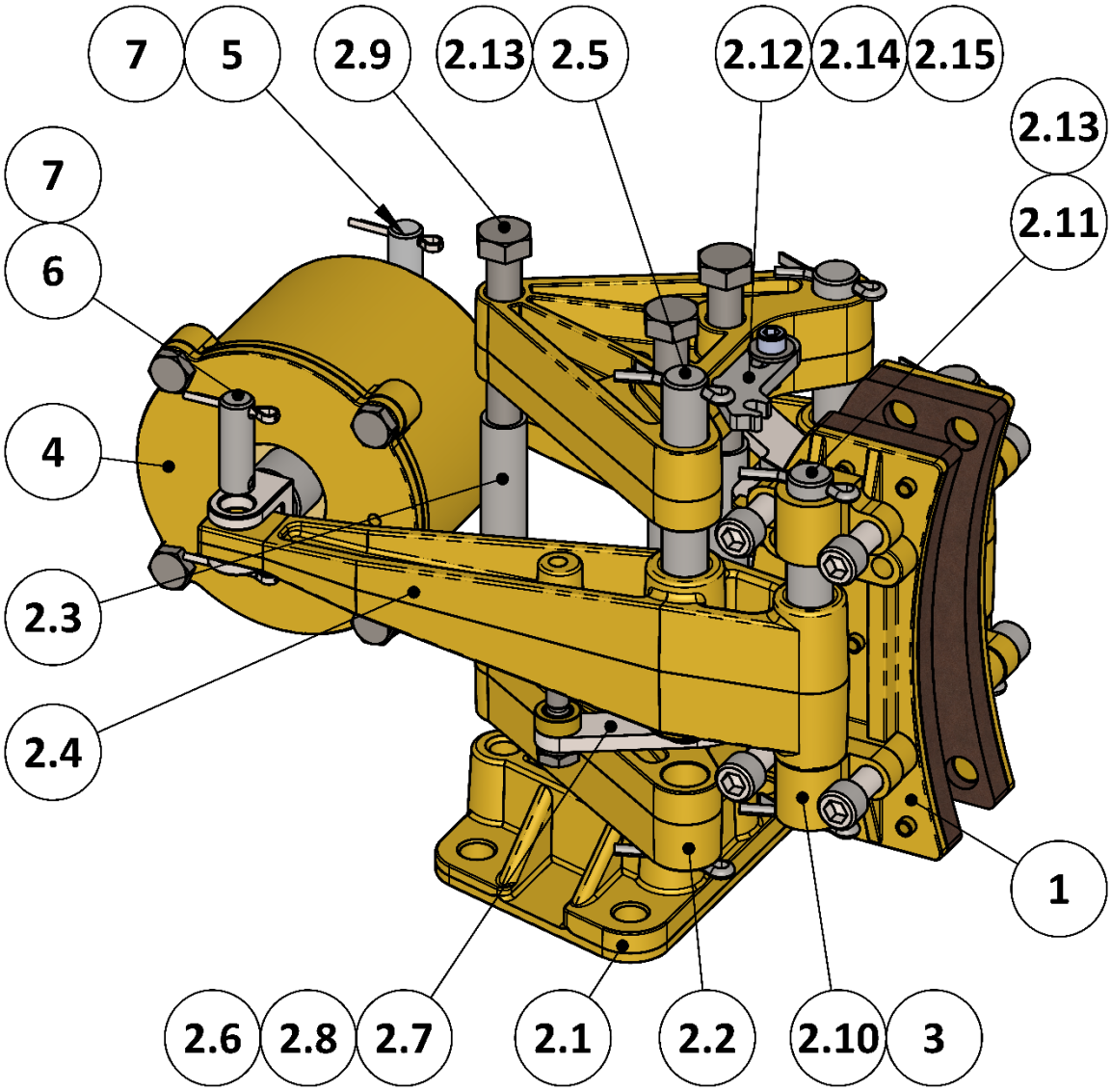

ITEM	QTY.	PART NUMBER	DESCRIPTION
1	2	5019-LS	SHOE ASSEMBLY, 5/16 in K5
2	1	5019-SUB	SUB ASSEMBLY, 5019 CALIPER
2.1	1	5019-0001	BASE, 5019 CALIPER
2.2	2	5019-0002	SADDLE, 5019 CALIPER
2.3	3	5019-0003	SPACER, 5019 CALIPER
2.4	2	5019-0004	LEVER, 5019 CALIPER
2.5	2	5019-0022	SADDLE PIN, 5019 CALIPER
2.6	2	5019-0027	SPACER, 5019 CALIPER
2.7	2	5019-0011	BALANCE LINK NO. 1, 5019 CALIPER
2.8	2	5019-0024	SHOULDER BOLT, 5019 CALIPER
2.9	3	1001-1280	CAP SCREW, HEX HD, 3/8-16 UNC X 5, 18-8
2.1	4	5019-0006	PIVOT BLOCK, 5019 CALIPER
2.11	2	5019-0021	SHOE PIN, 5019 CALIPER
2.12	2	5019-0012	BALANCE LINK NO. 2, 5019 CALIPER
2.13	8	1026-0516	PIN, COTTER, 1/8IN X 1IN, 18-8 SS, ASME B18.8.1
2.14	2	1002-0808	SCREW, SKT HEAD, 10-24 X 1/2, 18-8 SS, ASTM F837
2.15	2	1023-0108	WASHER, FLAT, #10, 7/16 OD, 18-8 SS
3	8	1002-1112	SCREW, SKT HD, 5/16-18 X 3/4, 18-8
4	1	6107	AIR APPLIED ACTUATOR, 6107
5	1	6112-0010-S	PIN, 6107 ACTUATOR
6	1	6207-0010-L	PIN, LONG, 6207 ACTUATOR
7	4	1026-0312	PIN, COTTER, 3/32IN X 3/4IN, 18-8 SS, ASME B18.8.1

5019-AW

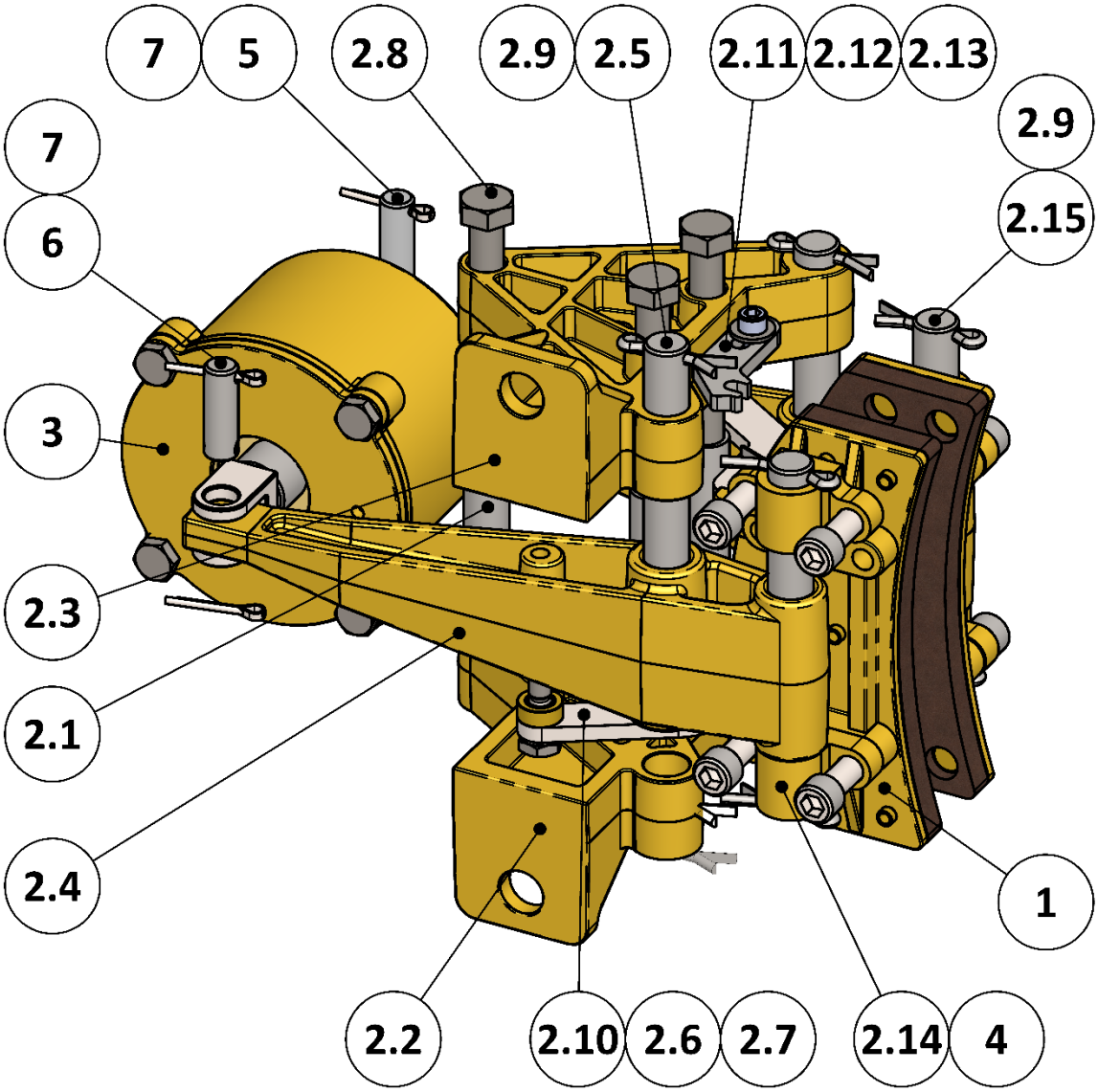

ITEM	QTY.	PART NUMBER	DESCRIPTION
1	2	5019-LS	SHOE ASSEMBLY, 5/16 in K5
2	1	5019-SUB-W	SUB ASSEMBLY, 5019-W CALIPER
2.1	3	5019-0003	SPACER, 5019 CALIPER
2.2	1	5019-0102-R	
2.3	1	5019-0102-L	SADDLE, SIDE MOUNT, LEFT, 5019 CALIPER
2.4	2	5019-0004	LEVER, 5019 CALIPER
2.5	2	5019-0022	SADDLE PIN, 5019 CALIPER
2.6	2	5019-0027	SPACER, 5019 CALIPER
2.7	2	5019-0024	SHOULDER BOLT, 5019 CALIPER
2.8	3	1001-1264	BOLT, HX HD, 3/8-16 UNC X 4, 18-8
2.9	8	1026-0516	PIN, COTTER, 1/8IN X 1IN, 18-8 SS, ASME B18.8.1
2.1	2	5019-0011	BALANCE LINK NO. 1, 5019 CALIPER
2.11	2	5019-0012	BALANCE LINK NO. 2, 5019 CALIPER
2.12	2	1002-0808	SCREW, SKT HEAD, 10-24 X 1/2, 18-8 SS, ASTM F837
2.13	2	1023-0108	WASHER, FLAT, #10, 7/16 OD, 18-8 SS
2.14	4	5019-0006	PIVOT BLOCK, 5019 CALIPER
2.15	2	5019-0021	SHOE PIN, 5019 CALIPER
3	1	6107	AIR APPLIED ACTUATOR, 6107
4	8	1002-1112	SCREW, SKT HD, 5/16-18 X 3/4, 18-8
5	1	6112-0010-S	PIN, 6107 ACTUATOR
6	1	6207-0010-L	PIN, LONG, 6207 ACTUATOR
7	4	1026-0312	PIN, COTTER, 3/32IN X 3/4IN, 18-8 SS, ASME B18.8.1

5019-AWX

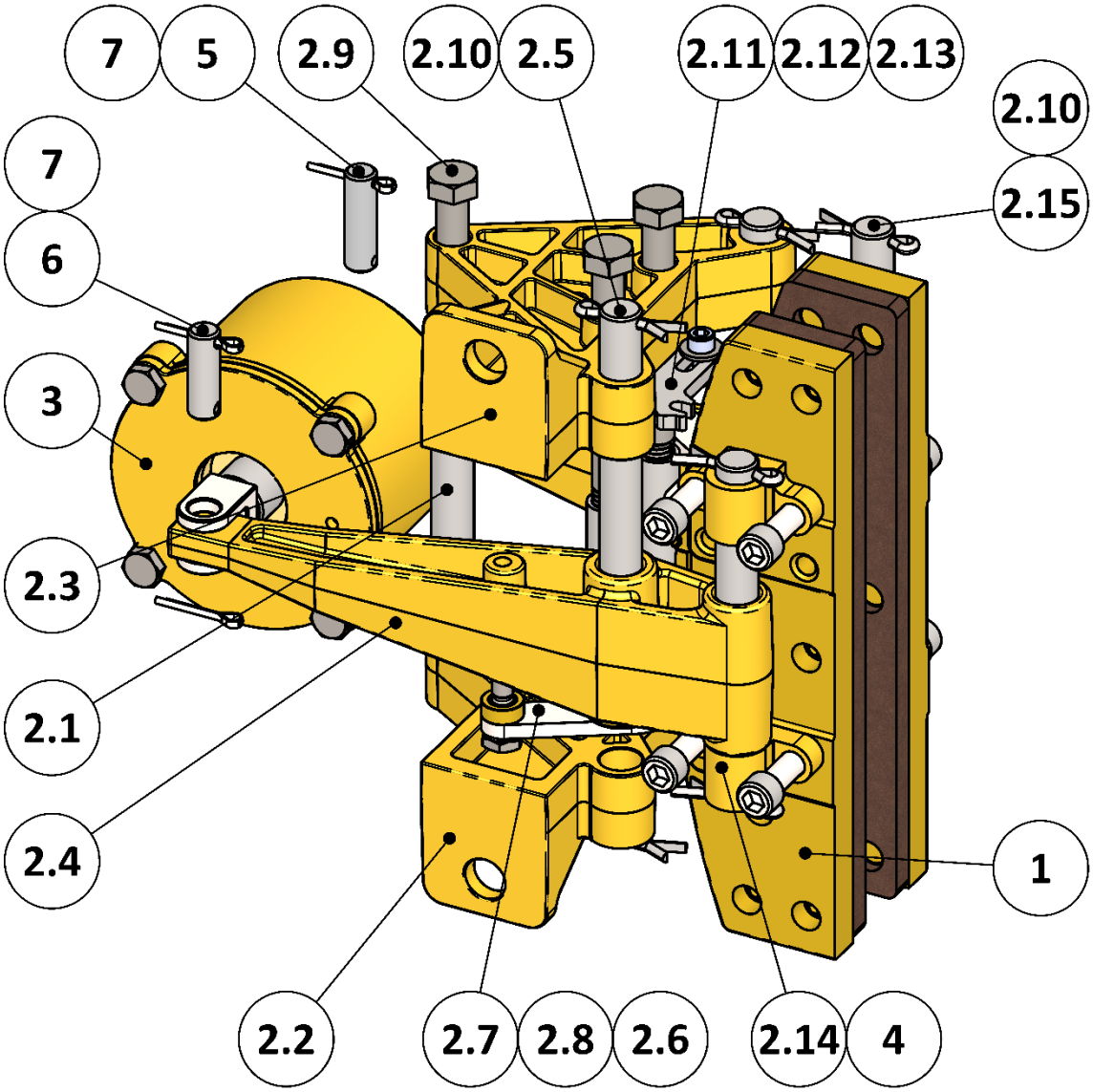

ITEM	QTY.	PART NUMBER	DESCRIPTION
1	2	5019-LSX	LINED SHOE, 5019, OVERSIZED
2	1	5019-SUB-W	SUB ASSEMBLY, 5019-W CALIPER
2.1	3	5019-0003	SPACER, 5019 CALIPER
2.2	1	5019-0102-R	SADDLE, SIDE MOUNT, RIGHT, 5019 CALIPER
2.3	1	5019-0102-L	SADDLE, SIDE MOUNT, LEFT, 5019 CALIPER
2.4	2	5019-0004	LEVER, 5019 CALIPER
2.5	2	5019-0022	SADDLE PIN, 5019 CALIPER
2.6	2	5019-0027	SPACER, 5019 CALIPER
2.7	2	5019-0011	BALANCE LINK NO. 1, 5019 CALIPER
2.8	2	5019-0024	SHOULDER BOLT, 5019 CALIPER
2.9	3	1001-1264	BOLT, HX HD, 3/8-16 UNC X 4, 18-8
2.1	8	1026-0516	PIN, COTTER, 1/8IN X 1IN, 18-8 SS, ASME B18.8.1
2.11	2	5019-0012	BALANCE LINK NO. 2, 5019 CALIPER
2.12	2	1002-0808	SCREW, SKT HEAD, 10-24 X 1/2, 18-8 SS, ASTM F837
2.13	2	1023-0108	WASHER, FLAT, #10, 7/16 OD, 18-8 SS
2.14	4	5019-0006	PIVOT BLOCK, 5019 CALIPER
2.15	2	5019-0021	SHOE PIN, 5019 CALIPER
3	1	6107	AIR APPLIED ACTUATOR, 6107
4	7	1002-1112	SCREW, SKT HD, 5/16-18 X 3/4, 18-8
5	1	6112-0010-S	PIN, 6107 ACTUATOR
6	1	6207-0010-L	PIN, LONG, 6207 ACTUATOR
7	4	1026-0312	PIN, COTTER, 3/32IN X 3/4IN, 18-8 SS, ASME B18.8.1

6107 Actuator

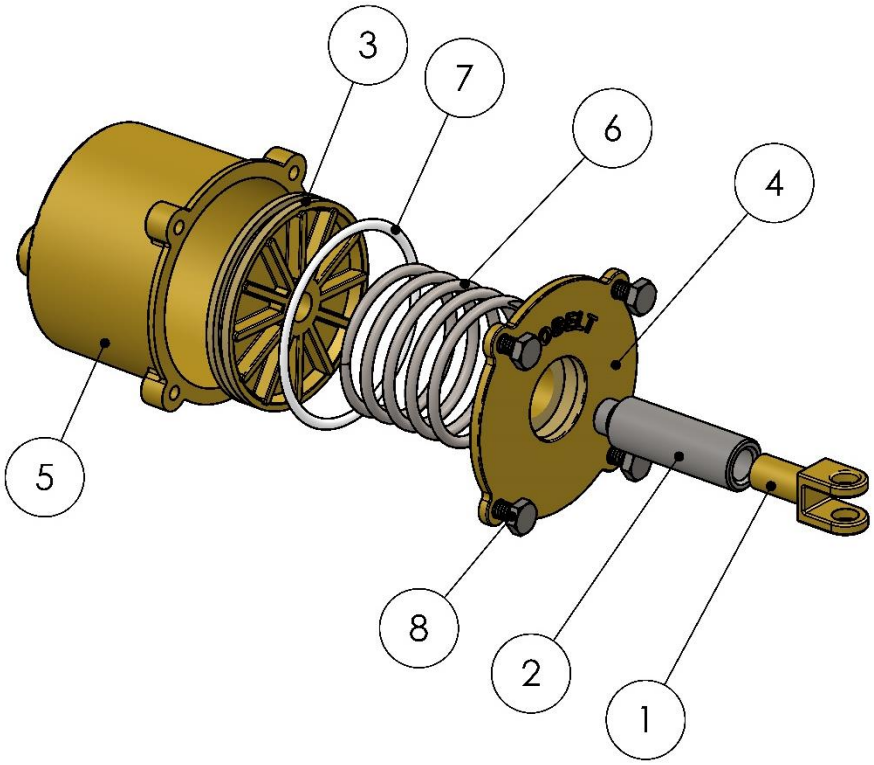

ITEM	QTY.	PART NUMBER	DESCRIPTION
1	1	6207-0005S	CLEVIS, 3/8 DIAM, 1/2 UNC, SHORT
2	1	6107-0004	PISTON ROD, 6107 ACTUATOR
3	1	6107-0003	PISTON, 6107 ACTUATOR
4	1	6107-0002	END CAP, 6107 ACTUATOR
5	1	6107-0001	PISTON HOUSING, 6107 ACTUATOR
6	1	1201-0054	SPRING, COMPRESSION, 2.24 OD X .16 WIRE X 3 L
7	1	1101-0232	O RING, 2-232, NBR70
8	4	1001-1008	SCREW, HEX HD, 1/4-20 UNC X 1/2, SS

5019-LS

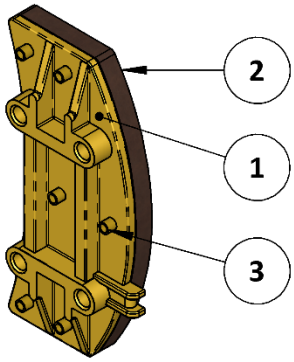

ITEM	QTY.	PART NUMBER	DESCRIPTION
1	1	5019-0005	SHOE, 5019 CALIPER
2	1	5019-0007	BRAKE PAD, 5/16 K5
3	6	1033-0807	RIVET; 3/16 X 7/16 (7-7)

5019-LSX

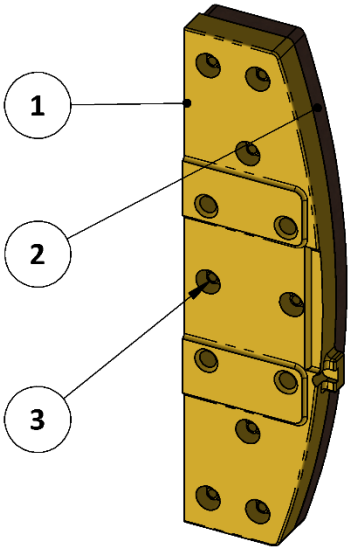

ITEM	QTY.	PART NUMBER	DESCRIPTION
1	1	5019-1005	SHOE, OVERSIZED, 5019 CALIPER
2	1	5019-1007	BRAKE PAD, 5/16 K5
3	8	1033-0807	RIVET; 3/16 X 7/16 (7-7)

Kobelt Manufacturing Co. Ltd.
8238 129th Street
Surrey, British Columbia,
Canada, V3W 0A6

Sales Tel: +1-604-572-3935
Fax: +1-604-590-8313
Email: sales@kobelt.com
Website: www.kobelt.com

Made in Canada / Printed in Canada