5022-A | AIR APPLIED CALIPER DISC BRAKE

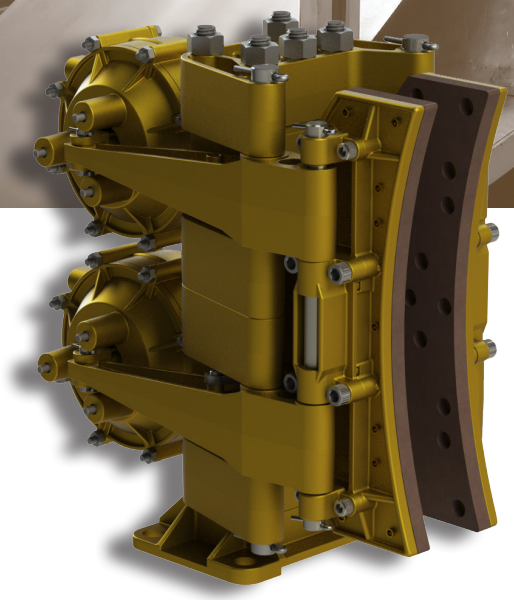

KEY BENEFITS

Bronze & stainless steel construction

Easy brake pad replacement

Well matched to Kobelt's standard range of 2" ventilated discs

Putting you in control.

For over three decades, Kobelt has been manufacturing air applied disc brakes using a double diaphragm design for accurate tension control. Constructed of bronze and stainless steel, Kobelt's disc brakes are built to last in the harshest conditions.

Available with several options, these caliper disc brakes are well suited for service braking applications on uncoilers, work boats and more.

SPECIFICATIONS

Normal Force:	0...8550 lbs	[38.0 KN]
Maximum Pressure:	100 psi	[6.9 bar]
Port Size:	¼ NPT	
Actuator Volume:	38.4 in^3	[629 cm^3]
Temperature Range:	-40˚F...+120˚F -40˚C...+49˚C	
Disc Thickness:	2 in	[51 mm]
Minimum Disc Diameter:	20 in	[508 mm]
Maximum Disc Diameter[2]:	60 in	[1524 mm]
Pad Life:	4025 hp-hr	[3002 kw-hr]
Total Pad Area:	84 in^2	[542 cm^2]
Weight:	91 lbs	[41.4 kg]

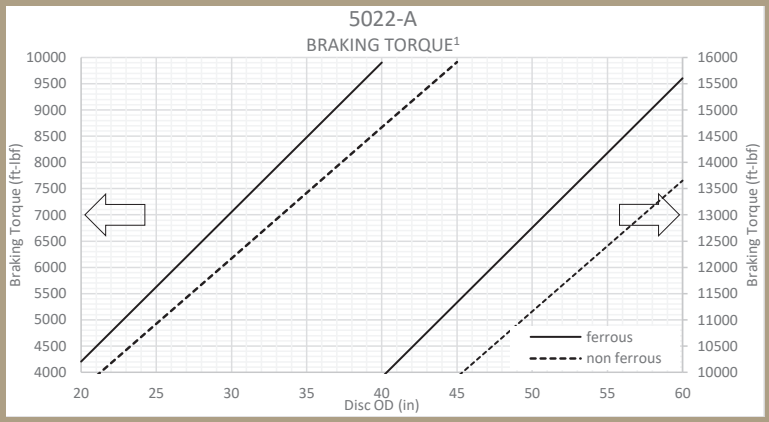

1 Values in this chart are theoretical and for reference only. They are based on properly bedded and burnished linings acting on a rotor at 20˚C and manufactured to required specifications.

2 Requires a minimum 4.34 in [110 mm] wide face.

8238 129th Street, Surrey, British Columbia, Canada, V3W 0A6
604.572.3935 ▪ sales@kobelt.com ▪ www.kobelt.com

SPECIFICATIONS

FOOT MOUNTED VERSION

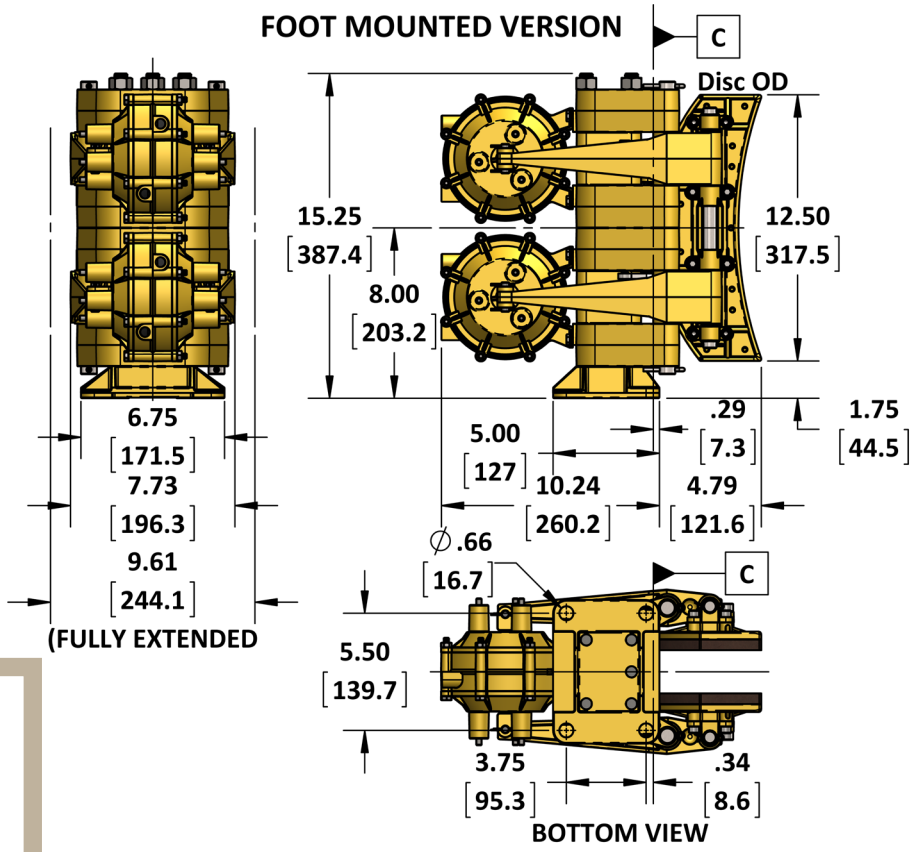

Brake Model Code Key

5022-A ☐-☐-☐

Friction material
- (blank) = standard
- N = non-sparking
- C = low COF (.12-.15)
- E = mid COF (.25-.28)

Disc thickness
- (blank) = 2.000 in
- 175 = 1.750 in
- 150 = 1.500 in
- 125 = 1.250 in
- 100 = 1.000 in

Mounting code
- (blank) = foot mounted
- W = side mounted

SIDE MOUNTED VERSION

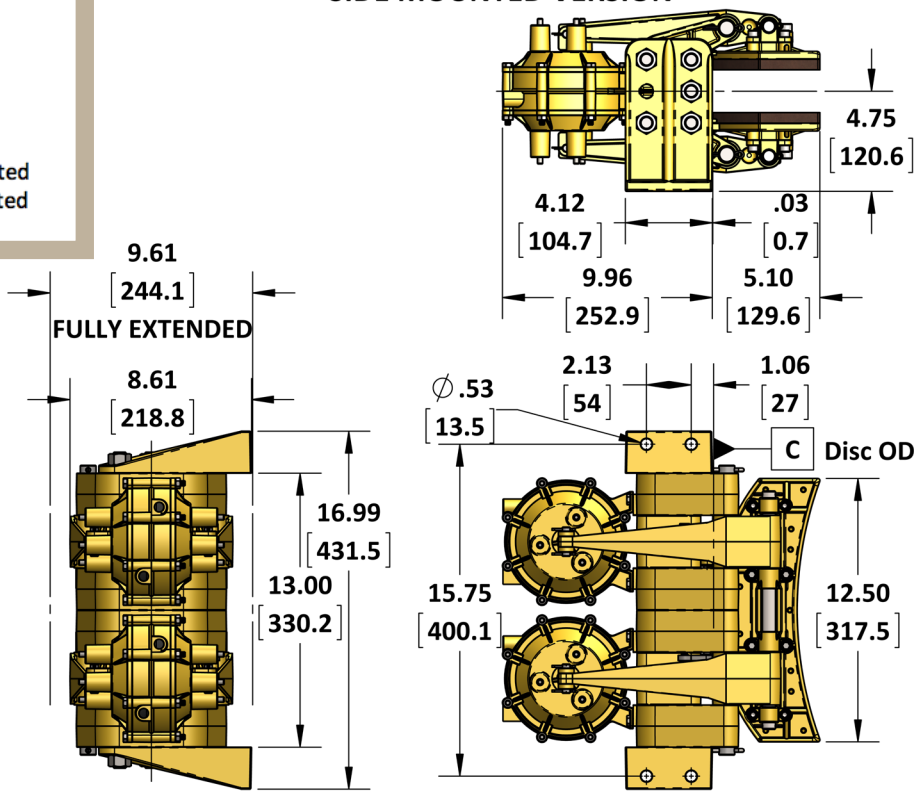

PARTS LISTING

5022-A Caliper Brake

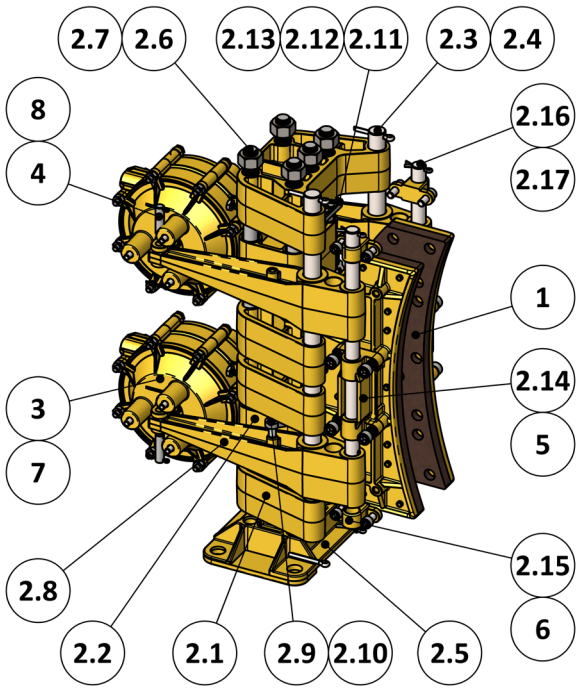

ITEM	QTY.	PART NUMBER	5022-A DESCRIPTION
1	2	5022-LS	SHOE ASSEMBLY, 5022 CALIPER, 1/2" K5
2	1	5022-SUB	SUB-ASSEMBLY, 5022 CALIPER
2.1	4	5021-0002	SADDLE, 5021 CALIPER
2.2	2	5021-0003	SPACER, 5021 CALIPER
2.3	2	5022-0022	SADDLE PIN, 5022 CALIPER
2.4	4	1026-0824	COTTER PIN, 3/16 x 1 1/2, 18-8
2.5	1	5021-0001	FOOT
2.6	5	5022-0023	TIE ROD, 5022 CALIPER
2.7	5	1022-0116	HEX NUT - REGULAR; 5/8-11 UNC GR 18-8
2.8	4	5021-0004	LEVER, 5021 CALIPER
2.9	2	5022-0011	BALANCING LINK, PART 1, 5022 CALIPER
2.10	2	5021-0226	LINK PIN 5/16 UNC X 7/8 LG
2.11	2	5022-0112	BALANCING LINK, PART 2, 5022 CALIPER
2.12	4	1002-0808	SCREW, SKT HD CAP, #10 UNC x 1/2 LG, SS
2.13	4	1023-0108	WASHER FLAT #10 TYPE A SS
2.14	2	5022-0013	PIVOT BLOCK, CENTER, 5022 CALIPER
2.15	4	5022-0014	PIVOT BLOCK, OUTER, 5022 CALIPER
2.16	2	5022-0021	SHOE PIN, 5022 CALIPER
2.17	4	1026-0516	COTTER PIN; 1/8 DIA X 1 LG. 18-8
3	2	6112	AIR APPLIED ACTUATOR, 6112
4	4	6112-0010-L	PIN, LONG, 6112 ACTUATOR
5	8	1002-1216	SCREW, SKT HD CAP, 3/8-16 UNC X 1, SS
6	8	1002-1112	SCREW, SKT HD, 5/16-18 X 3/4, 18-8
7	8	1001-1008	SCREW HEX HD 1/4-20 UNC X 1/2 SS
8	8	**1026-0312**	COTTER PIN 3/32 X 3/4 SS

5022-AW Caliper Brake

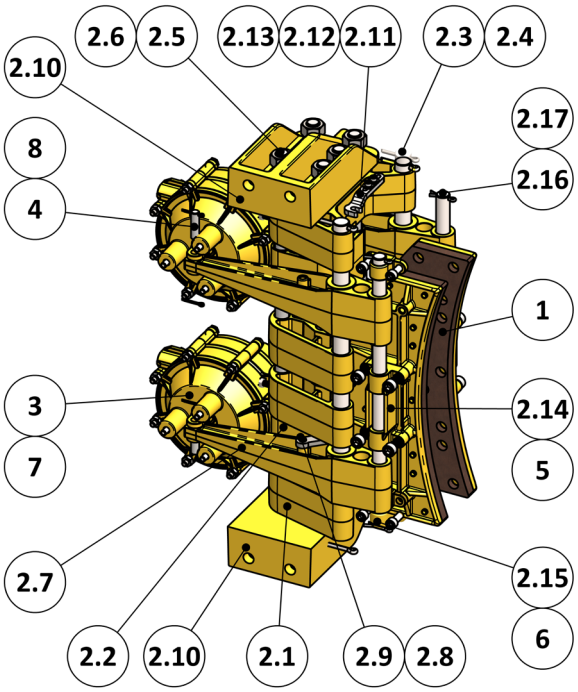

ITEM	QTY.	PART NUMBER	5022-AW DESCRIPTION
1	2	5022-LS	SHOE ASSEMBLY, 5022 CALIPER, 1/2" K5
2	1	5022-SUB-W	SUB-ASSEMBLY, 5022 CALIPER
2.1	4	5021-0002	SADDLE, 5021 CALIPER
2.2	2	5021-0003	SPACER, 5021 CALIPER
2.3	2	5022-0022	SADDLE PIN, 5022 CALIPER
2.4	4	1026-0824	COTTER PIN, 3/16 x 1 1/2, 18-8
2.5	5	5022-0023	TIE ROD, 5022 CALIPER
2.6	10	1022-0116	HEX NUT - REGULAR; 5/8-11 UNC GR 18-8
2.7	4	5021-0004	LEVER, 5021 CALIPER
2.8	2	5021-0226	LINK PIN 5/16 UNC X 7/8 LG
2.9	2	5022-0011	BALANCING LINK, PART 1, 5022 CALIPER
2.10	2	5021-0101	SIDE MOUNT BRACKET, 5021 CALIPER
2.11	2	5022-0112	BALANCING LINK, PART 2, 5022 CALIPER
2.12	4	1002-0808	SCREW, SKT HD CAP, #10 UNC x 1/2 LG, SS
2.13	4	1023-0108	WASHER FLAT #10 TYPE A SS
2.14	2	5022-0013	PIVOT BLOCK, CENTER, 5022 CALIPER
2.15	4	5022-0014	PIVOT BLOCK, OUTER, 5022 CALIPER
2.16	2	5022-0021	SHOE PIN, 5022 CALIPER
2.17	4	1026-0516	COTTER PIN; 1/8 DIA X 1 LG. 18-8
3	2	6112	AIR APPLIED ACTUATOR, 6112
4	4	6112-0010-L	PIN, LONG, 6112 ACTUATOR
5	8	1002-1216	SCREW, SKT HD CAP, 3/8-16 UNC X 1, SS
6	8	1002-1112	SCREW, SKT HD, 5/16-18 X 3/4, 18-8
7	8	1001-1008	SCREW HEX HD 1/4-20 UNC X 1/2 SS
8	8	**1026-0312**	COTTER PIN 3/32 X 3/4 SS

PARTS LISTING

6112 Actuator

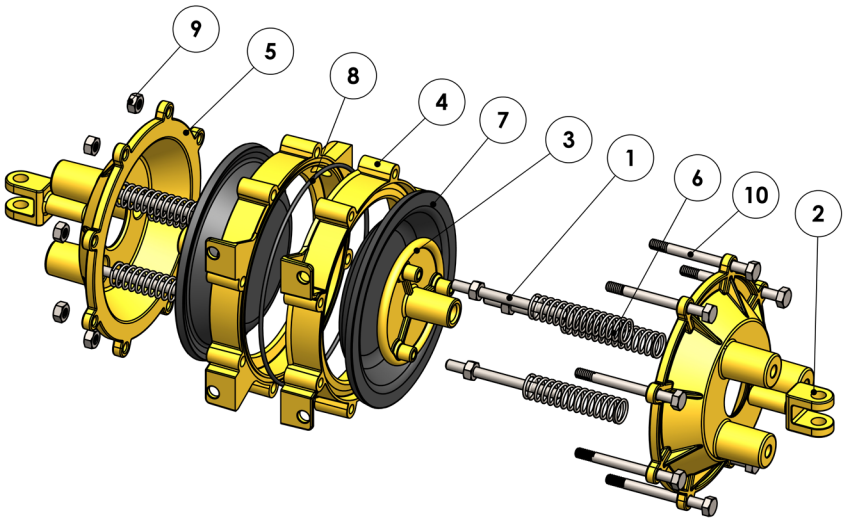

ITEM	QTY.	PART NUMBER	6112 DESCRIPTION
1	6	6112-0007	GUIDE PIN, 6112 ACTUATOR
2	2	6112-0005	CLEVIS, 6112 ACTUATOR
3	2	6112-0003	DIAPHRAGM WASHER, 6112 ACTUATOR
4	2	6112-0002	CENTRE HOUSING, 6112 ACTUATOR
5	2	6112-0001	END CAP, 6112 ACTUATOR
6	6	1201-0146	SPRING, COMPRESSION, .640 OD X .065 WIRE X 2.95 L
7	2	1105-0012	DIAPHRAGM, NO. 12 SIZE
8	1	1101-0161	O-RING, 5-1/2 ID X 3/32 THK, NBR70
9	14	1022-0110	HEX NUT, 1/4-20-NC, GR18-8
10	8	1001-1044	BOLT, HX HD, 1/4-20 X 2.75, SS

5022-LS Caliper Brake

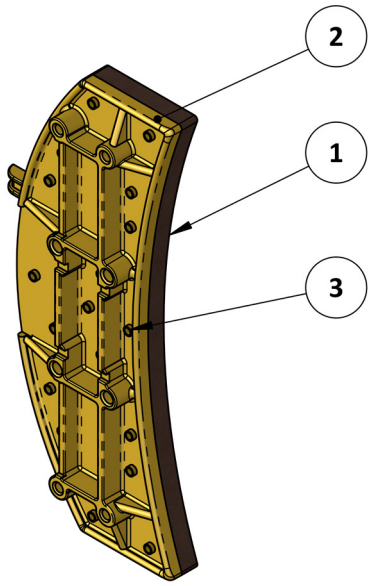

ITEM	QTY.	PART NUMBER	5022-LS DESCRIPTION
1	1	5022-0007	BRAKE PAD; 1/2" K5
2	1	5022-0005	BRAKE SHOE
3	19	1033-1007	RIVET, 1/4 X 7/16 (10-7), BRASS

Note: Parts lists are applicable to standard models only.

8238 129th Street, Surrey, British Columbia, Canada, V3W 0A6
604.572.3935 ▪ sales@kobelt.com ▪ www.kobelt.com