5024-H | HYDRAULIC APPLIED CALIPER DISC BRAKE



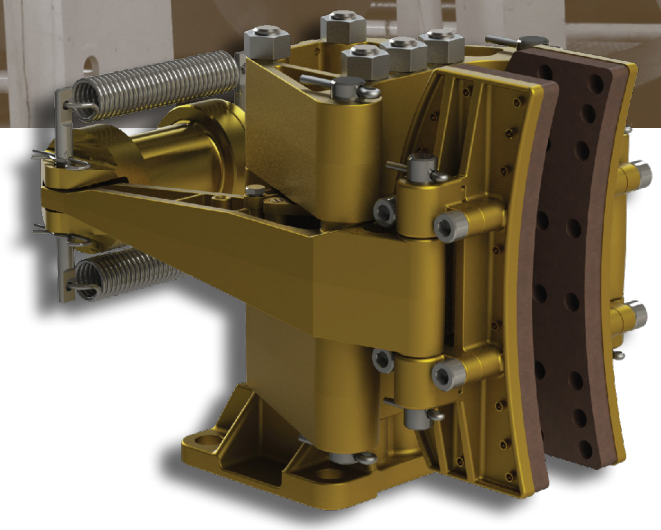

KEY BENEFITS

Bronze & stainless steel construction

Easy brake pad replacement

Well matched to Kobelt's standard range of 2" ventilated discs

Putting you in control.

Constructed entirely of bronze and stainless steel, Kobelt's hydraulic applied disc brakes are built to last in the harshest, most corrosive conditions.

The brake features a shoe design which allows the brake pads to be easily and quickly changed while leaving the caliper in place.

Available with several options, these caliper disc brakes are well suited for service braking applications in the oil and gas, mining, material handling and manufacturing industries.

Specifications

Temperature Range:	**-40°F...+131°F**	**-40°C...+55°C**
Disc Thickness:	**2 in**	**[51 mm]**
Minimum Disc Diameter:	**20 in**	**[508 mm]**
Maximum Disc Diameter[3]:	**Unlimited**	
Pad Life:	**4750 hp-hr**	**[3544 kw-hr]**
Total Pad Area:	**69 in²**	**[445 cm²]**
Weight:	**103 lbs**	**[46.7 kg]**

PART NO.	MAXIMUM PRESSURE	NORMAL FORCE	PORT SIZE	ACTUATOR VOLUME
5024-H	1000 psi [69 bar]	0...7800 lbs [34.7 KN]	-06 SAE J1926 ORB	1.6 in³ [26 cc]
5024-H1	250 psi [17 bar]	0...9200 lbs [40.9 KN]	¼ NPT	8.3 in³ [136 cc]

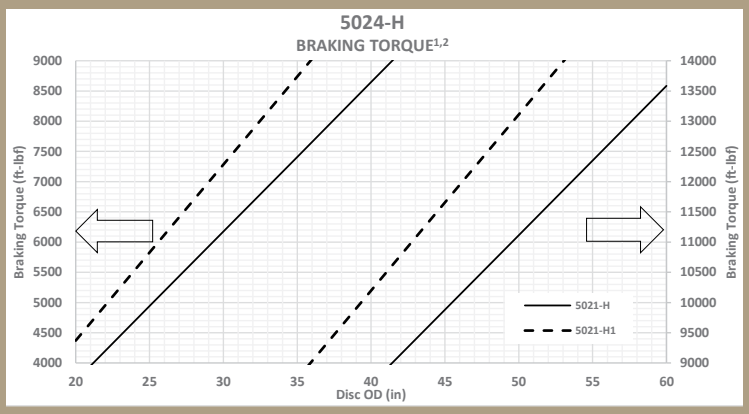

[1] Values in this chart are theoretical and for reference only. They are based on properly bedded and burnished linings acting on a rotor at 20°C and manufactured to required specifications.

[2] Chart torque values are for a Steel or Cast Iron disc. For bronze or stainless steel discs, reduce torque values by 8%.

[3] Requires a minimum 4.71 in [120 mm] wide face.

8238 129th Street, Surrey, British Columbia, Canada, V3W 0A6
604.572.3935 • sales@kobelt.com • www.kobelt.com

SPECIFICATIONS

FOOT MOUNTED VERSION

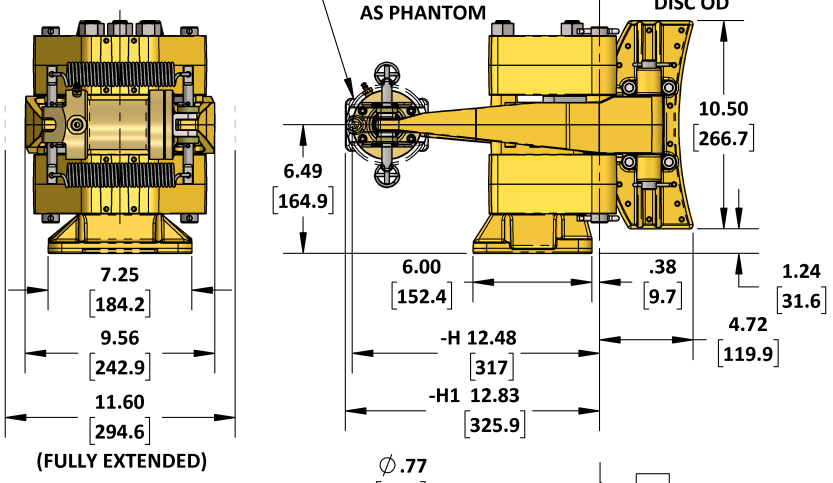

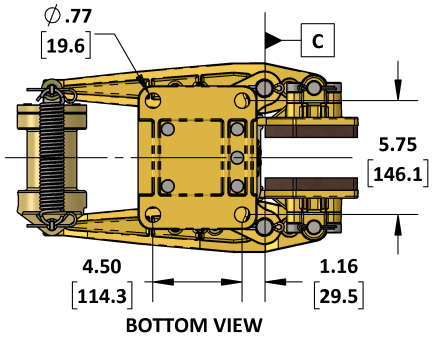

Brake Model Code Key

5024-H □□-□□-□

- Friction material
  - (blank) = standard
  - N = non-sparking
  - C = low COF (.12-.15)
  - E = mid COF (.25-.28)
- Disc thickness
  - (blank) = 2.000 in
  - 175 = 1.750 in
  - 150 = 1.500 in
  - 125 = 1.250 in
  - 100 = 1.000 in
- Mounting code
  - (blank) = foot mounted
  - W = side mounted
- Actuator code
  - (blank) = High pressure actuator (Standard)
  - 1 = Low pressure actuator

SIDE MOUNTED VERSION

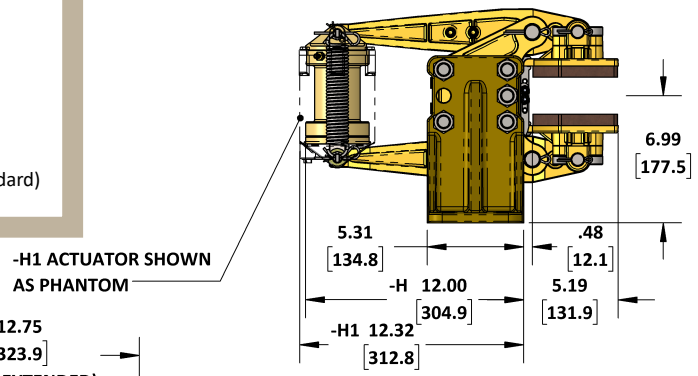

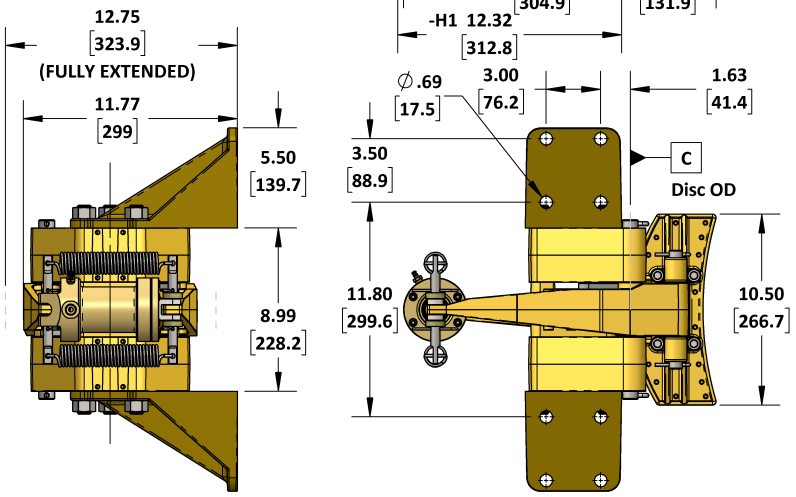

8238 129th Street, Surrey, British Columbia, Canada, V3W 0A6
604.572.3935 • sales@kobelt.com • www.kobelt.com