7196 | JOG LEVER

Putting you in control.

The Kobelt 7196 jog lever is used for jog or back-up steering control over electronic or hydraulic power steering systems. This device provides two speed, non follow up jog control over the vessel's rudder. The jog lever may also be configured as a single speed, duplicate output device.

Constructed of robust bronze and stainless steel, this device can be installed at any location on the vessel and will provide a long service life in all marine environments. The 7196 comes in a combined black and polished chrome finish.

Specifications

Handle Travel, Slow:	30° (per direction)
Handle Travel, Fast:	45° (per direction)
Operating Force:	11 lbs [48 N]
Electrical Contacts:	2 Form A, Normally Open (per direction)
Maximum Voltage:	250 VAC / 24 VDC
Maximum Current:[1]	12 VDC: 6A / 24 VDC: 5A / 250 VAC: 6A
Connection:	
• Default:	2X 3C 18 AWG [0.75 mm^2], 80 in [2m] long pigtail
• -D:	2X M8 Male, 4C 24AWG [0.75 mm^2], 80in [2m] long
EMC emissions:	per IEC 60945
EMC immunity:	per IEC 60945
Compass Safe Distance:	2 in [5 cm]
Environmental category:	ENV5 / Class C / exposed
IP Rating[2]:	IP56 (above console)
Operating Temperature:	-13°F ... 158°F [-25°C ... 70°C]
Environmental Conditions:	per IEC 60945
Vibration Resistance:	0.7 g
Finish:	Polyester powder coat Textured black
Product Weight:	4.0 lbs [1.8 kg]

Approvals

ABS (20-2067473-PDA)
LR (LR2481998TA)

Key Benefits

- Type approved
- Lab tested to meet IEC 60945 standards
- Water-tight, corrosion resistant design
- Two speed, spring centered operation
- Bronze and stainless steel construction

Notes:
1) Maximum reported current is for an inductive load. Current is per switch contact
2) See product manual for mounting requirements to achieve IP56 rating

8238 129th Street, Surrey, British Columbia, Canada, V3W 0A6
604.572.3935 • sales@kobelt.com • www.kobelt.com

SPECIFICATIONS

General Arrangement

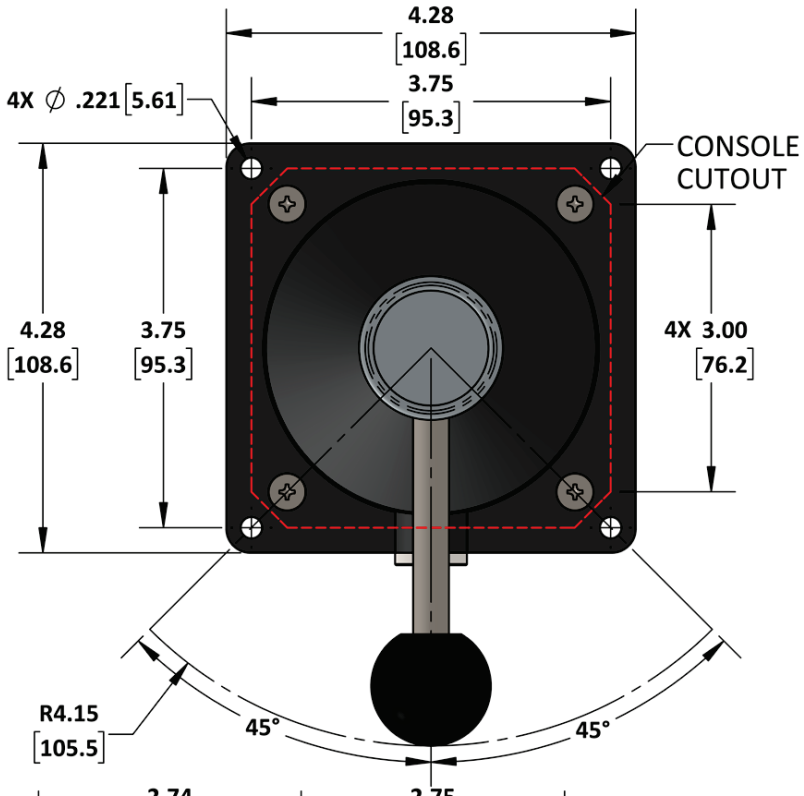

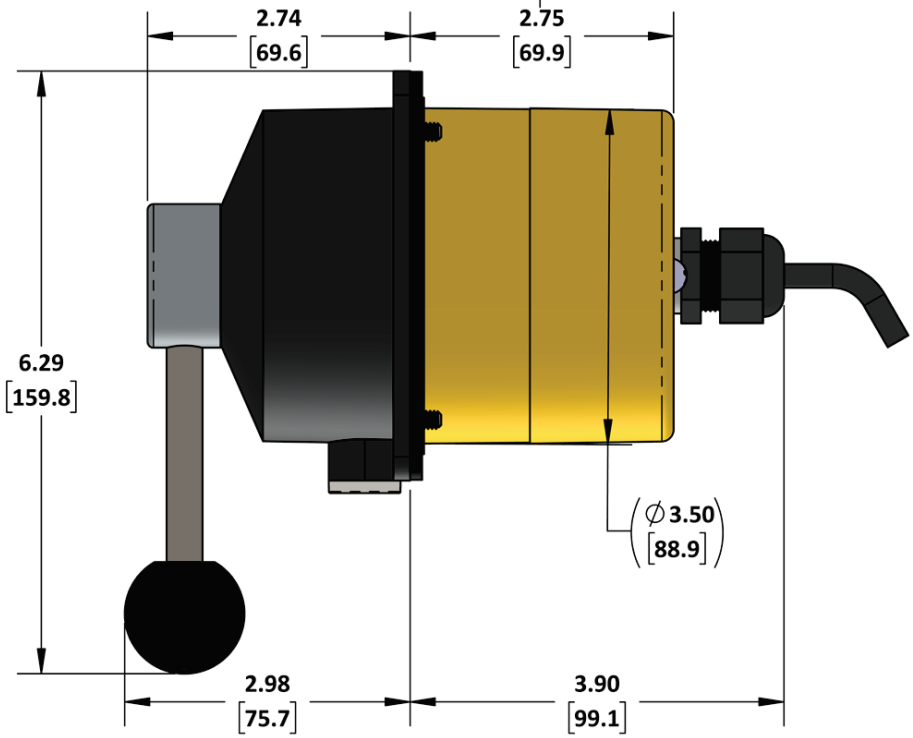

Model Code Key

7196 – ☐

Output Type

Blank	= Two Speed
D	= Single Speed, Duplicate Output

Wiring Diagram

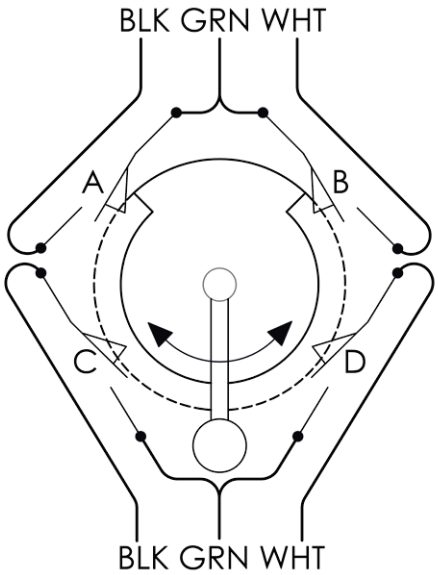

8238 129th Street, Surrey, British Columbia, Canada, V3W 0A6

604.572.3935 • sales@kobelt.com • www.kobelt.com