KP6000 | AUXILIARY GET-HOME DRIVE

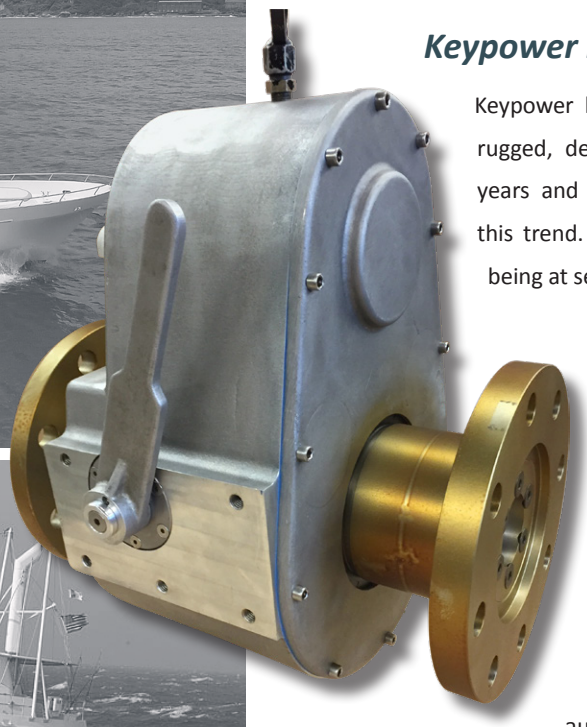

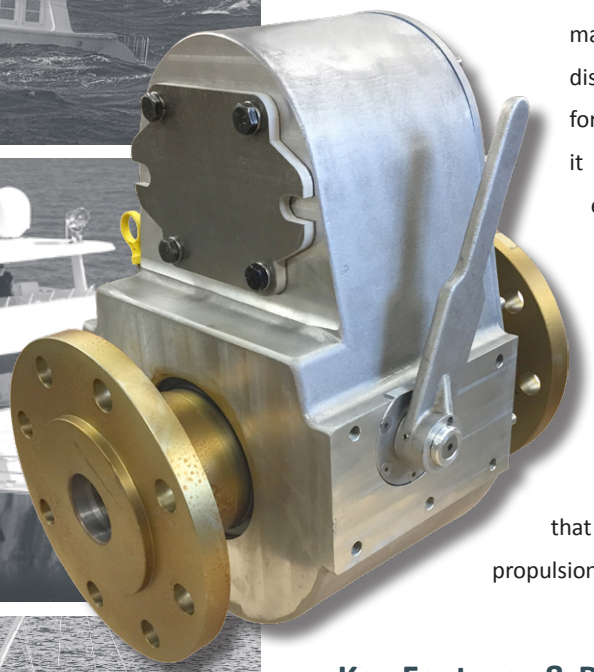

Keypower keeps you in control.

Keypower has been designing and manufacturing rugged, dependable marine systems for over 40 years and Keypower's Get-Home Drives continue this trend. There is nothing more harrowing than being at sea in a single engine boat and losing your primary propulsion. In the interest of safety, ensure you have a secondary propulsion source.

The Keypower Get-Home Drive, also known as an Auxiliary Prop Drive, is a hydraulically-driven, clutched gear box that is mounted in a vessel's main drive line and provides power to turn the vessel's propeller by means of auxiliary engine horsepower when the main propulsion system is shut down or disabled. The Get-Home Drive also allows for driving the vessel at low speeds, where it is undesirable to operate a large main engine at or near idle speed for extended periods of time.

Keypower Get-Home Drives come in two sizes; the KP4500 and KP6000. Both come equipped with high quality AGMA 8 gear sets. The drives run off the auxiliary engine so that the vessel burns less fuel, while providing propulsion in the event of a main drive line failure.

Key Features & Benefits

- Emergency propeller drive if main propulsion fails
- Easy to install
- Cost effective solution for peace of mind at sea
- Also effective for cruising at low speeds (avoids larger engines having to operate at near idle speed)
- Compact design (where space is at a premium)

8238 129th Street, Surrey, British Columbia, Canada, V3W 0A6
604.572.3935 • sales@kobelt.com • www.kobelt.com

KOBELT

SPECIFICATIONS

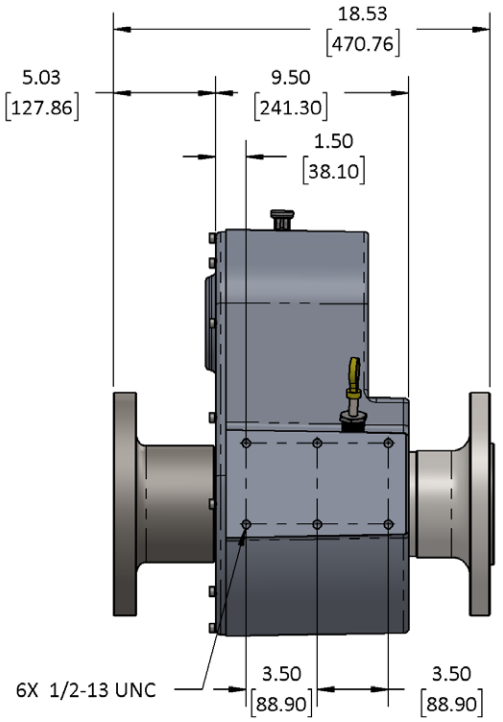

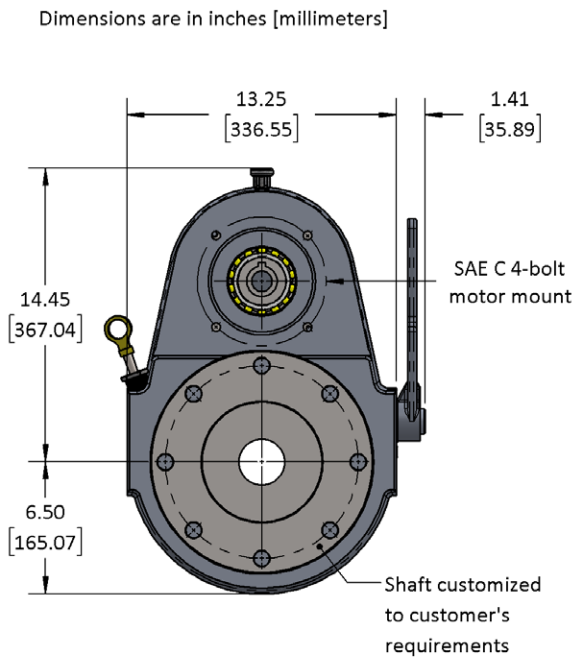

SPECIFICATIONS	KP4500	KP6000
Housing	Cast A-356 Aluminum (Heat Treated)	Cast A-356 Aluminum (Heat Treated)
Gears	Steel Spur (Hardened)	Steel Spur (Hardened)
Clutch	Steel Splined (Hardened)	Steel Splined (Hardened)
Maximum Flange Dia.[1]	N/A	Up to 12.375" (324mm)
Maximum Hydraulic H.P.[2]	Up to 40 H.P.	Up to 75 H.P.
Hydraulic System	Open or Closed Loop	Open or Closed Loop
Maximum Throughput Torque[3]	N/A	7200ft-lbs (9755Nm)
Unit Weight	75lbs (34kg)	260lbs (118kg)

[1] The KP4500 is a through-shaft design while the KP6000 is a floating shaft design.
[2] Cooling may be required depending on application.
[3] The KP4500 is a through-shaft design while the KP6000 is a floating shaft design.

8238 129th Street, Surrey, British Columbia, Canada, V3W 0A6
604.572.3935 ▪ sales@kobelt.com ▪ www.kobelt.com